NSi824x

High Reliability Reinforced Quad-Channel Digital Isolators

Datasheet (EN) 1.3

Product Overview

The NSi824x devices are high reliability quad-channel digital isolators. The NSi824x device is safety certified by UL1577 support 5kV insulations withstand voltage, while providing high electromagnetic immunity and low emissions at low power consumption. The data rate of the NSi824x is up to 150Mbps, and the common-mode transient immunity (CMTI) is up to 250kV/us. The NSi824x device provides digital channel direction configuration and the default output level configuration when the input power is lost. Wide supply voltage of the NSi824x device supports to connect with most digital interface directly, easy to do the level shift. High system level EMC performance enhance reliability and stability of use. AEC-Q100 (Grade 1) option is provided for all devices.

Key Features

- Up to 5000V_{rms} Insulation voltage
- Date rate: DC to 150Mbps
- Power supply voltage: 2.5V to 5.5V
- AEC-Q100 Grade 1 available for all devices
- High CMTI: 250kV/us
- Chip level ESD: HBM: ±8kV
- Robust Electromagnetic Compatibility (EMC)
  - System-Level ESD, EFT, and Surge Immunity
  - Low Emissions
- Default output high level or low-level option
- Isolation barrier life: >60 years
- Low power consumption: 1.5mA/ch (1 Mbps)
- Low propagation delay: <15ns
- Operation temperature: -55℃~125℃
- RoHS-compliant packages:
  - SSOP16
  - SOP16(300mil)
  - SOP16(600mil)

Safety Regulatory Approvals

- UL recognition: up to 5000V_{rms} for 1 minute per UL1577
- CQC certification per GB4943.1-2011
- CSA component notice 5A
- DIN VDE V 0884-11:2017-01

Applications

- Industrial automation system
- Isolated SPI, RS232, RS485
- General-purpose multichannel isolation
- Motor control

Device Information

Part Number	*Package*	*Body Size*
NSI824xS-DSSR	SSOP16	4.90mm × 3.90mm
NSI824xW-DSWR	SOP16(300mil)	10.30mm × 7.50mm
NSI824xW-DSWWR	SOP16(600mil)	10.30mm × 14.0mm

Functional Block Diagrams

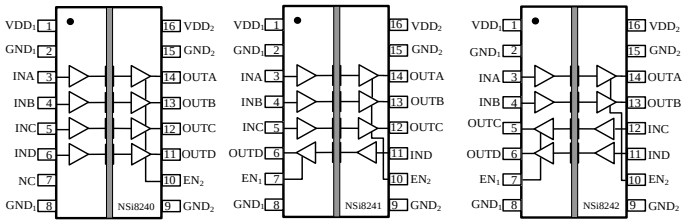

Figure 1. NSi824x Block Diagram

Copyright © 2021, NOVOSENSE

INDEX

1. PIN CONFIGURATION AND FUNCTIONS 3
2. ABSOLUTE MAXIMUM RATINGS 4
3. RECOMMENDED OPERATING CONDITIONS 4
4. THERMAL INFORMATION 5
5. SPECIFICATIONS 5
5.1. Electrical Characteristics 5
5.2. Supply Current Characteristics – 5V Supply 6
5.3. Supply Current Characteristics –3.3V Supply 7
5.4. Supply Current Characteristics–2.5V Supply 8
5.5. Switching Characteristics - 5V Supply 10
5.6. Switching Characteristics - 3.3V Supply 10
5.7. Switching Characteristics - 2.5V Supply 11
5.8. Typical Performance Characteristics 12
5.9. Parameter Measurement Information 13
6. HIGH VOLTAGE FEATURE DESCRIPTION 14
6.1. Insulation and Safety Related Specifications 14
6.2. Safety-Limiting Values 15
6.3. Regulatory Information 17
7. FUNCTION DESCRIPTION 18
7.1. Overview 18
7.2. OOK Modulation 19
8. APPLICATION NOTE 20
8.1. Typical Application Circuit 20
8.2. PCB Layout 20
8.3. High Speed Performance 21
8.4. Typical Supply Current Equations 21
9. PACKAGE INFORMATION 22
10. ORDER INFORMATION 25
11. DOCUMENTATION SUPPORT 26
12. TAPE AND REEL INFORMATION 27
13. REVISION HISTORY 29

Copyright © 2021, NOVOSENSE

1. Pin Configuration and Functions

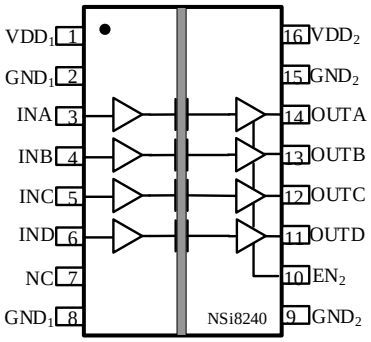

Figure 1.1 NSi8240W Package

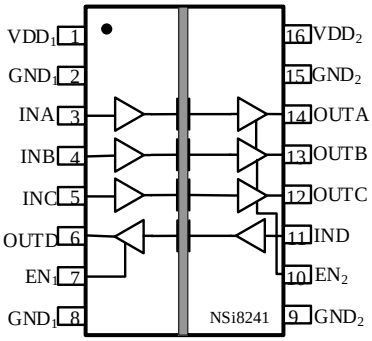

Figure 1.2 NSi8241W Package

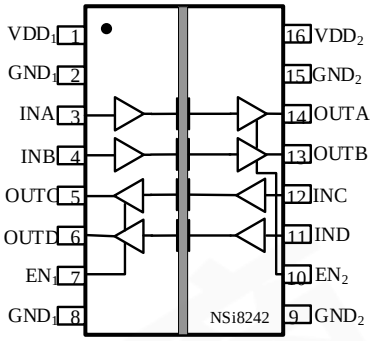

Figure 1.3 NSi8242W Package

Table 1.1 NSi8240W/ NSi8241W/ NSi8242W Pin Configuration and Description

NSi8240W PIN NO.	*NSi8241W PIN NO.*	*NSi8242W PIN NO.*	*SYMBOL*	*FUNCTION*
1	1	1	VDD_1	Power Supply for Isolator Side 1
2	2	2	GND_1	Ground 1, the ground reference for Isolator Side 1
3	3	3	INA	Logic Input A
4	4	4	INB	Logic Input B
5	5	12	INC	Logic Input C
6	11	11	IND	Logic Input D
7	7	7	NC/ EN_1	No Connection. Or Output Enable 1. Active high logic input. When EN_1 is high or NC, the output of Side 1 is enabled. When EN_1 is low, the output of Side 1 is disabled to high impedance state.
8	8	8	GND_1	Ground 1, the ground reference for Isolator Side 1
9	9	9	GND_2	Ground 2, the ground reference for Isolator Side 2
10	10	10	EN_2	Output Enable 2. Active high logic input. When EN_2 is high or NC, the output of Side 2 is enabled. When EN_2 is low, the output of Side 2 is disabled to high impedance state.
11	6	6	OUTD	Logic Output D
12	12	5	OUTC	Logic Output C
13	13	13	OUTB	Logic Output B
14	14	14	OUTA	Logic Output A
15	15	15	GND2	Ground 2, the ground reference for Isolator Side 2
16	16	16	VDD2	Power Supply for Isolator Side 2

Copyright © 2021, NOVOSENSE

2. Absolute Maximum Ratings

Parameters	*Symbol*	*Min*	*Typ*	*Max*	*Unit*	*Comments*
Power Supply Voltage	VDD1, VDD2	-0.5		6.5	V	
Maximum Input Voltage	VINA, VINB, VINC, VIND	-0.4		VDD+0.4	V	The maximum voltage must not exceed 6.5V
Maximum Output Voltage	VOUTA, VOUTB, VOUTC, VOUTD	-0.4		VDD+0.4	V	The maximum voltage must not exceed 6.5V
Maximum Input/Output Pulse Voltage	VINA, VINB, VINC, VIND, VOUTA, VOUTB, VOUTC, VOUTD	-0.8		VDD+0.8	V	Pulse width should be less than 100ns, and the duty cycle should be less than 10%
Output current	Io	-15		15	mA	
Maximum Surge Isolation Voltage	V_{IOSM}			6.25	kV	
Operating Temperature	Topr	-55		125	℃	
Storage Temperature	Tstg	-55		150	℃	
Electrostatic discharge	HBM			±8000	V	
	CDM			±2000	V	

3. Recommended Operating Conditions

Parameters	*Symbol*	*min*	*typ*	*max*	*unit*
Power Supply Voltage	VDD1, VDD2	2.5		5.5	V
Operating Temperature	Topr	-55		125	℃
High Level Input Voltage	VIH	2			V
Low Level Input Voltage	VIL			0.8	V
Data rate	DR			150	Mbps

Copyright © 2021, NOVOSENSE

4. Thermal Information

Parameters	*Symbol*	*SSOP16*	*SOP16(300mil)*	*SOP16(600mil)*	*Unit*
IC Junction-to-Air Thermal Resistance	θ_{JA}	140	78.9	78.9	℃/W
Junction-to-case (top) thermal resistance	$\theta_{JC(top)}$	54.4	41.6	41.1	℃/W
Junction-to-board thermal resistance	θ_{JB}	51.9	43.6	49.5	℃/W

5. Specifications

5.1. Electrical Characteristics

(VDD1=2.5V~5.5V, VDD2=2.5V~5.5V, Ta=-55℃ to 125℃. Unless otherwise noted, Typical values are at VDD1 = 5V, VDD2 = 5V, Ta = 25℃)

Parameters	*Symbol*	*Min*	*Typ*	*Max*	*Unit*	*Comments*
Power on Reset	VDD_{POR}		2.2		V	POR threshold as during power-up
	VDD_{HYS}		0.1		V	POR threshold Hysteresis
Input Threshold	V_{IT}		1.6		V	Input Threshold at rising edge
	V_{IT_HYS}		0.4		V	Input Threshold Hysteresis
High Level Input Voltage	V_{IH}	2			V	
Low Level Input Voltage	V_{IL}			0.8	V	
High Level Output Voltage	V_{OH}	VDD-0.4			V	I_{OH} =- 4mA
Low Level Output Voltage	V_{OL}			0.4	V	I_{OL} = 4mA
Output Impedance	R_{out}		50		ohm	
Input Pull high or low Current	I_{pull}		8	15	uA	
Start Up Time after POR	trbs		10		us	
Common Mode Transient Immunity	CMTI	±200	±250		kV/us	See Figure 5.11 , C_L = 15pF

Copyright © 2021, NOVOSENSE

5.2. Supply Current Characteristics – 5V Supply

(VDD1=5V± 10%, VDD2=5V± 10%, Ta=-55℃ to 125℃. Unless otherwise noted, Typical values are at **VDD1 = 5V, VDD2 = 5V,** Ta = 25℃)

Parameters	*Symbol*	*Min*	*Typ*	*Max*	*Unit*	*Comments*
Supply current	NSi8240					
	I_{DD1}(Q0)		1.24	2.04	mA	All Input 0V for NSi8240x0 Or All Input at supply for NSi8240x1
	I_{DD2}(Q0)		2.94	4.84	mA	
	I_{DD1}(Q1)		5.26	8.68	mA	All Input at supply for NSi8240x0 Or All Input 0V for NSi8240x1
	I_{DD2}(Q1)		3.02	4.98	mA	
	I_{DD1}(1M)		3.4	5.1	mA	All Input with 1Mbps, C_L=15pF
	I_{DD2}(1M)		2.78	4.39	mA	
	I_{DD1}(10M)		3.56	5.34	mA	All Input with 10Mbps, C_L=15pF
	I_{DD2}(10M)		4.26	6.68	mA	
	I_{DD1}(100M)		4.98	7.47	mA	All Input with 100Mbps, C_L=15pF
	I_{DD2}(100M)		18.44	38.12	mA	
	NSi8241					
	I_{DD1}(Q0)		1.66	2.74	mA	All Input 0V for NSi8241x0 Or All Input at supply for NSi8241x1
	I_{DD2}(Q0)		2.51	4.14	mA	
	I_{DD1}(Q1)		4.70	7.76	mA	All Input at supply for NSi8241x0 Or All Input 0V for NSi8241x1
	I_{DD2}(Q1)		3.58	5.91	mA	
	I_{DD1}(1M)		3.25	4.875	mA	All Input with 1Mbps, C_L=15pF
	I_{DD2}(1M)		2.94	4.41	mA	
	I_{DD1}(10M)		3.74	5.61	mA	All Input with 10Mbps, C_L=15pF
	I_{DD2}(10M)		4.09	6.135	mA	
	I_{DD1}(100M)		8.35	12.76	mA	All Input with 100Mbps, C_L = 15pF
	I_{DD2}(100M)		15.08	29.67	mA	
	NSi8242					
	I_{DD1}(Q0)		2.09	3.44	mA	All Input 0V for NSi8242x0 Or All Input at supply for NSi8242x1
	I_{DD2}(Q0)		2.09	3.44	mA	
	I_{DD1}(Q1)		4.14	6.83	mA	All Input at supply for NSi8242x0 Or All Input 0V for NSi8242x1
	I_{DD2}(Q1)		4.14	6.83	mA	

Copyright © 2021, NOVOSENSE

Parameters	Symbol	Min	Typ	Max	Unit	Comments
	I_{DD1}(1M)		3.09	4.635	mA	All Input with 1Mbps, C_L=15pF
	I_{DD2}(1M)		3.09	4.635	mA	
	I_{DD1}(10M)		3.91	5.865	mA	All Input with 10Mbps, C_L=15pF
	I_{DD2}(10M)		3.91	5.865	mA	
	I_{DD1}(100M)		11.71	21.22	mA	All Input with 100Mbps, C_L = 15pF
	I_{DD2}(100M)		11.71	21.22	mA	

5.3. Supply Current Characteristics –3.3V Supply

(VDD1=3.3V± 10%, VDD2=3.3V± 10%, Ta=-55℃ to 125℃. Unless otherwise noted, Typical values are at VDD1 = 3.3V, VDD2 = 3.3V, Ta = 25℃)

Parameters	Symbol	Min	Typ	Max	Unit	Comments
Supply current	NSi8240					
	I_{DD1}(Q0)		1.19	1.96	mA	All Input 0V for NSi8240x0 Or All Input at supply for NSi8240x1
	I_{DD2}(Q0)		2.87	4.74	mA	
	I_{DD1}(Q1)		5.21	8.59	mA	All Input at supply for NSi8240x0 Or All Input 0V for NSi8240x1
	I_{DD2}(Q1)		2.95	4.86	mA	
	I_{DD1}(1M)		3.32	4.98	mA	All Input with 1Mbps, C_L=15pF
	I_{DD2}(1M)		2.62	4.22	mA	
	I_{DD1}(10M)		3.42	5.13	mA	All Input with 10Mbps, C_L=15pF
	I_{DD2}(10M)		3.60	5.72	mA	
	I_{DD1}(100M)		4.40	6.6	mA	All Input with 100Mbps, C_L=15pF
	I_{DD2}(100M)		13.00	25.73	mA	
	NSi8241					
	I_{DD1}(Q0)		1.61	2.66	mA	All Input 0V for NSi8241x0 Or All Input at supply for NSi8241x1
	I_{DD2}(Q0)		2.45	4.04	mA	
	I_{DD1}(Q1)		4.64	7.66	mA	All Input at supply for NSi8241x0 Or All Input 0V for NSi8241x1
	I_{DD2}(Q1)		3.51	5.79	mA	
	I_{DD1}(1M)		3.15	4.725	mA	All Input with 1Mbps, C_L=15pF
	I_{DD2}(1M)		2.80	4.2	mA	
	I_{DD1}(10M)		3.47	5.205	mA	All Input with 10Mbps,

Copyright © 2021, NOVOSENSE

Parameters	Symbol	Min	Typ	Max	Unit	Comments
	I_{DD2}(10M)		3.56	5.34	mA	C_L=15pF
	I_{DD1}(100M)		6.55	9.825	mA	All Input with 100Mbps, C_L = 15pF
	I_{DD2}(100M)		10.85	20.31	mA	
	NSi8242					
	I_{DD1}(Q0)		2.03	3.35	mA	All Input 0V for NSi8242x0 Or All Input at supply for NSi8242x1
	I_{DD2}(Q0)		2.03	3.35	mA	
	I_{DD1}(Q1)		4.08	6.72	mA	All Input at supply for NSi8242x0 Or All Input 0V for NSi8242x1
	I_{DD2}(Q1)		4.08	6.72	mA	
	I_{DD1}(1M)		2.97	4.455	mA	All Input with 1Mbps, C_L=15pF
	I_{DD2}(1M)		2.97	4.455	mA	
	I_{DD1}(10M)		3.51	5.265	mA	All Input with 10Mbps, C_L=15pF
	I_{DD2}(10M)		3.51	5.265	mA	
	I_{DD1}(100M)		8.70	14.93	mA	All Input with 100Mbps, C_L = 15pF
	I_{DD2}(100M)		8.70	14.93	mA	

5.4. Supply Current Characteristics–2.5V Supply

(VDD1=2.5V± 10%, VDD2=2.5V± 10%, Ta=-55℃ to 125℃. Unless otherwise noted, Typical values are at VDD1 = 2.5V, VDD2 = 2.5V, Ta = 25℃)

Parameters	Symbol	Min	Typ	Max	Unit	Comments
Supply current	NSi8240					
	I_{DD1}(Q0)		1.17	1.92	mA	All Input 0V for NSi8240x0 Or All Input at supply for NSi8240x1
	I_{DD2}(Q0)		2.83	4.66	mA	
	I_{DD1}(Q1)		5.13	8.46	mA	All Input at supply for NSi8240x0 Or All Input 0V for NSi8240x1
	I_{DD2}(Q1)		2.89	4.77	mA	
	I_{DD1}(1M)		3.28	4.92	mA	All Input with 1Mbps, C_L=15pF
	I_{DD2}(1M)		2.54	4.1	mA	
	I_{DD1}(10M)		3.34	5.01	mA	All Input with 10Mbps, C_L=15pF
	I_{DD2}(10M)		3.30	5.23	mA	
	I_{DD1}(100M)		3.96	5.94	mA	All Input with 100Mbps, C_L=15pF
	I_{DD2}(100M)		10.44	20.15	mA	

Copyright © 2021, NOVOSENSE

Parameters	*Symbol*	*Min*	*Typ*	*Max*	*Unit*	*Comments*
	NSi8241					
	I_{DD1}(Q0)		1.58	2.61	mA	All Input 0V for NSi8241x0 Or All Input at supply for NSi8241x1
	I_{DD2}(Q0)		2.41	3.98	mA	
	I_{DD1}(Q1)		4.57	7.54	mA	All Input at supply for NSi8241x0 Or All Input 0V for NSi8241x1
	I_{DD2}(Q1)		3.45	5.69	mA	
	I_{DD1}(1M)		3.10	4.65	mA	All Input with 1Mbps, C_L=15pF
	I_{DD2}(1M)		2.73	4.095	mA	
	I_{DD1}(10M)		3.33	4.995	mA	All Input with 10Mbps, C_L=15pF
	I_{DD2}(10M)		3.31	4.965	mA	
	I_{DD1}(100M)		5.58	8.37	mA	All Input with 100Mbps, C_L = 15pF
	I_{DD2}(100M)		8.82	16.05	mA	
	NSi8242					
	I_{DD1}(Q0)		2.00	3.29	mA	All Input 0V for NSi8242x0 Or All Input at supply for NSi8242x1
	I_{DD2}(Q0)		2.00	3.29	mA	
	I_{DD1}(Q1)		4.01	6.62	mA	All Input at supply for NSi8242x0 Or All Input 0V for NSi8242x1
	I_{DD2}(Q1)		4.01	6.62	mA	
	I_{DD1}(1M)		2.91	4.365	mA	All Input with 1Mbps, C_L=15pF
	I_{DD2}(1M)		2.91	4.365	mA	
	I_{DD1}(10M)		3.32	4.98	mA	All Input with 10Mbps, C_L=15pF
	I_{DD2}(10M)		3.32	4.98	mA	
	I_{DD1}(100M)		7.20	12.21	mA	All Input with 100Mbps, C_L = 15pF
	I_{DD2}(100M)		7.20	12.21	mA	

Copyright © 2021, NOVOSENSE

5.5. Switching Characteristics - 5V Supply

(VDD1=5V± 10%, VDD2=5V± 10%, Ta=-55℃ to 125℃. Unless otherwise noted, Typical values are at **VDD1 = 5V, VDD2 = 5V,** Ta = 25℃)

Parameters	*Symbol*	*Min*	*Typ*	*Max*	*Unit*	*Comments*
Data Rate	DR	0		150	Mbps	
Minimum Pulse Width	PW			5.0	ns	
Propagation Delay	t_{PLH}	2.5	6.54	15	ns	See Figure 5.9 , C_L = 15pF
	t_{PHL}	2.5	8.30	15	ns	See Figure 5.9 , C_L = 15pF
Pulse Width Distortion $\lvert t_{PHL} - t_{PLH} \rvert$	PWD			5.0	ns	See Figure 5.9 , C_L = 15pF
Rising Time	t_r			5.0	ns	See Figure 5.9 , C_L = 15pF
Falling Time	t_f			5.0	ns	See Figure 5.9 , C_L = 15pF
Peak Eye Diagram Jitter	t_{JIT}(PK)		350		ps	
Channel-to-Channel Delay Skew	t_{SK}(c2c)			2.5	ns	
Part-to-Part Delay Skew	t_{SK}(p2p)			5.0	ns	
Disable high to Tri-State	t_{PHZ}		10.0	30	ns	See Figure 5.10 , C_L = 15pF, R_L=1k
Enable to Data high Valid	t_{PZH}		8.3	30	ns	See Figure 5.10 , C_L = 15pF, R_L=1k
Disable low to Tri-State	t_{PLZ}		10.2	30	ns	See Figure 5.10 , C_L = 15pF, R_L=1k
Enable to Data high Valid	t_{PZL}		8.6	30	ns	See Figure 5.10 , C_L = 15pF, R_L=1k

5.6. Switching Characteristics - 3.3V Supply

(VDD1=3.3V± 10%, VDD2=3.3V± 10%, Ta=-55℃ to 125℃. Unless otherwise noted, Typical values are at **VDD1 = 3.3V, VDD2 = 3.3V,** Ta = 25℃)

Parameters	*Symbol*	*Min*	*Typ*	*Max*	*Unit*	*Comments*
Data Rate	DR	0		150	Mbps	
Minimum Pulse Width	PW			5.0	ns	
Propagation Delay	t_{PLH}	2.5	7.5	15	ns	See Figure 5.9 , C_L = 15pF
	t_{PHL}	2.5	8.7	15	ns	See Figure 5.9 , C_L = 15pF
Pulse Width Distortion $\lvert t_{PHL} - t_{PLH} \rvert$	PWD			5.0	ns	See Figure 5.9 , C_L = 15pF
Rising Time	t_r			5.0	ns	See Figure 5.9 , C_L = 15pF
Falling Time	t_f			5.0	ns	See Figure 5.9 , C_L = 15pF

Copyright © 2021, NOVOSENSE

Peak Eye Diagram Jitter	t_{JIT}(PK)		350		ps	
Channel-to-Channel Delay Skew	t_{SK}(c2c)			2.5	ns	
Part-to-Part Delay Skew	t_{SK}(p2p)			5.0	ns	
Disable high to Tri-State	t_{PHZ}		11.6	30	ns	See Figure 5.10 , C_L = 15pF, R_L=1k
Enable to Data high Valid	t_{PZH}		11.7	30	ns	See Figure 5.10 , C_L = 15pF, R_L=1k
Disable low to Tri-State	t_{PLZ}		14.5	30	ns	See Figure 5.10 , C_L = 15pF, R_L=1k
Enable to Data high Valid	t_{PZL}		11.8	30	ns	See Figure 5.10 , C_L = 15pF, R_L=1k

5.7. Switching Characteristics - 2.5V Supply

(VDD1=2.5V± 10%, VDD2=2.5V± 10%, Ta=-40℃ to 125℃. Unless otherwise noted, Typical values are at **VDD1 = 2.5V, VDD2 = 2.5V,** Ta = 25℃)

Parameters	*Symbol*	*Min*	*Typ*	*Max*	*Unit*	*Comments*
Data Rate	DR	0		150	Mbps	
Minimum Pulse Width	PW			5.0	ns	
Propagation Delay	t_{PLH}	2.5	9.0	15	ns	See Figure 5.9 , C_L = 15pF
	t_{PHL}	2.5	9.3	15	ns	See Figure 5.9 , C_L = 15pF
Pulse Width Distortion $\lvert t_{PHL} - t_{PLH} \rvert$	PWD			5.0	ns	See Figure 5.9 , C_L = 15pF
Rising Time	t_r			5.0	ns	See Figure 5.9 , C_L = 15pF
Falling Time	t_f			5.0	ns	See Figure 5.9 , C_L = 15pF
Peak Eye Diagram Jitter	t_{JIT}(PK)		350		ps	
Channel-to-Channel Delay Skew	t_{SK}(c2c)			2.5	ns	
Part-to-Part Delay Skew	t_{SK}(p2p)			5.0	ns	
Disable high to Tri-State	t_{PHZ}		12.2	30	ns	See Figure 5.10 , C_L = 15pF, R_L=1k
Enable to Data high Valid	t_{PZH}		17.0	30	ns	See Figure 5.10 , C_L = 15pF, R_L=1k
Disable low to Tri-State	t_{PLZ}		17.2	30	ns	See Figure 5.10 , C_L = 15pF, R_L=1k
Enable to Data high Valid	t_{PZL}		17.8	30	ns	See Figure 5.10 , C_L = 15pF, R_L=1k

Copyright © 2021, NOVOSENSE

5.8. Typical Performance Characteristics

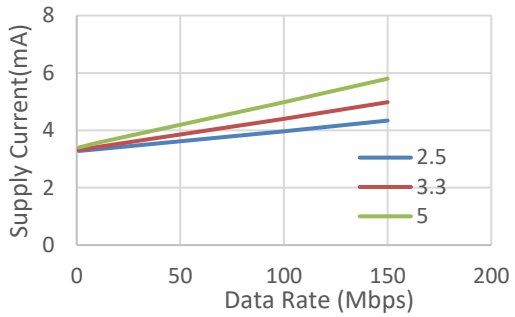

Figure 5.1 NSi8240 VDD1 Supply Current vs Data Rate

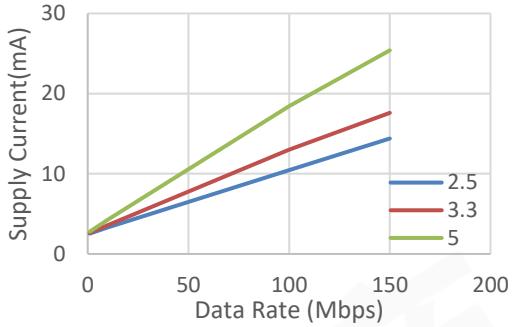

Figure 5.2 NSi8240 VDD2 Supply Current vs Data Rate

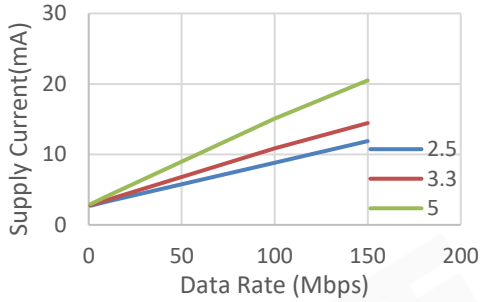

Figure 5.3 NSi8241 VDD1 Supply Current vs Data Rate

Figure 5.4 NSi8241 VDD2 Supply Current vs Data Rate

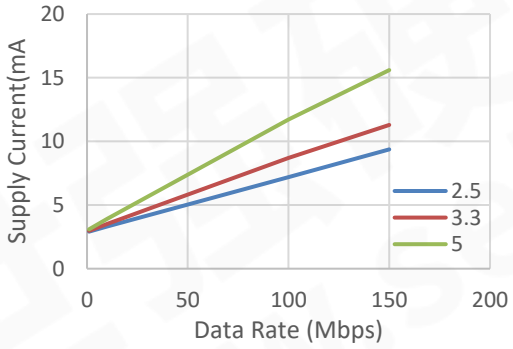

Figure 5.5 NSi8242 VDD1 Supply Current vs Data Rate

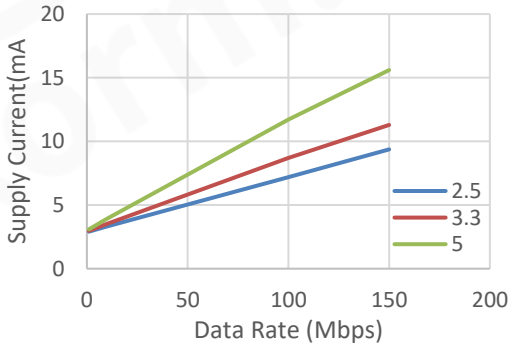

Figure 5.6 NSi8242 VDD2 Supply Current vs Data Rate

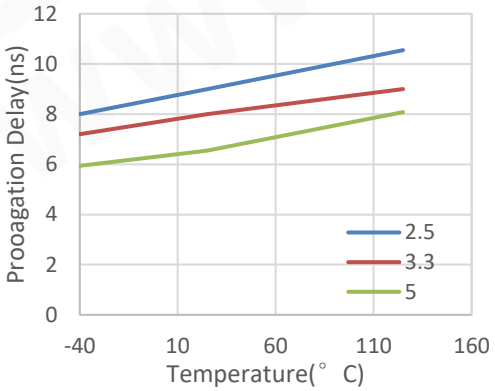

Figure 5.7 Rising Edge Propagation Delay Vs Temp

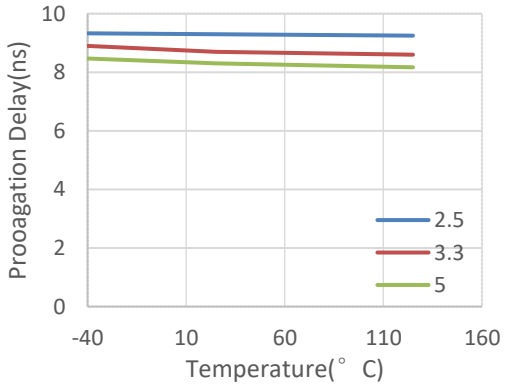

Figure 5.8 Falling Edge Propagation Delay Vs Temp

Copyright © 2021, NOVOSENSE

5.9. Parameter Measurement Information

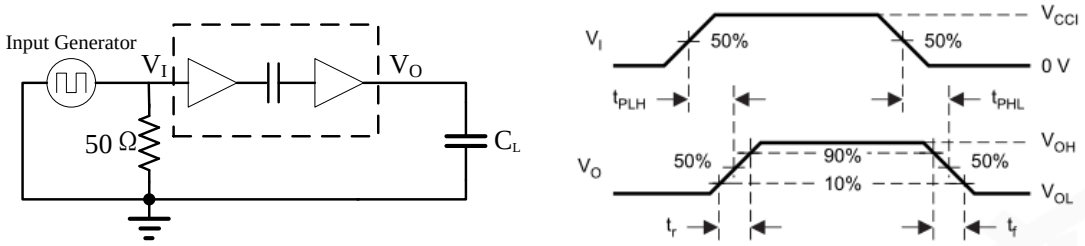

Figure 5.9 Switching Characteristics Test Circuit and Waveform

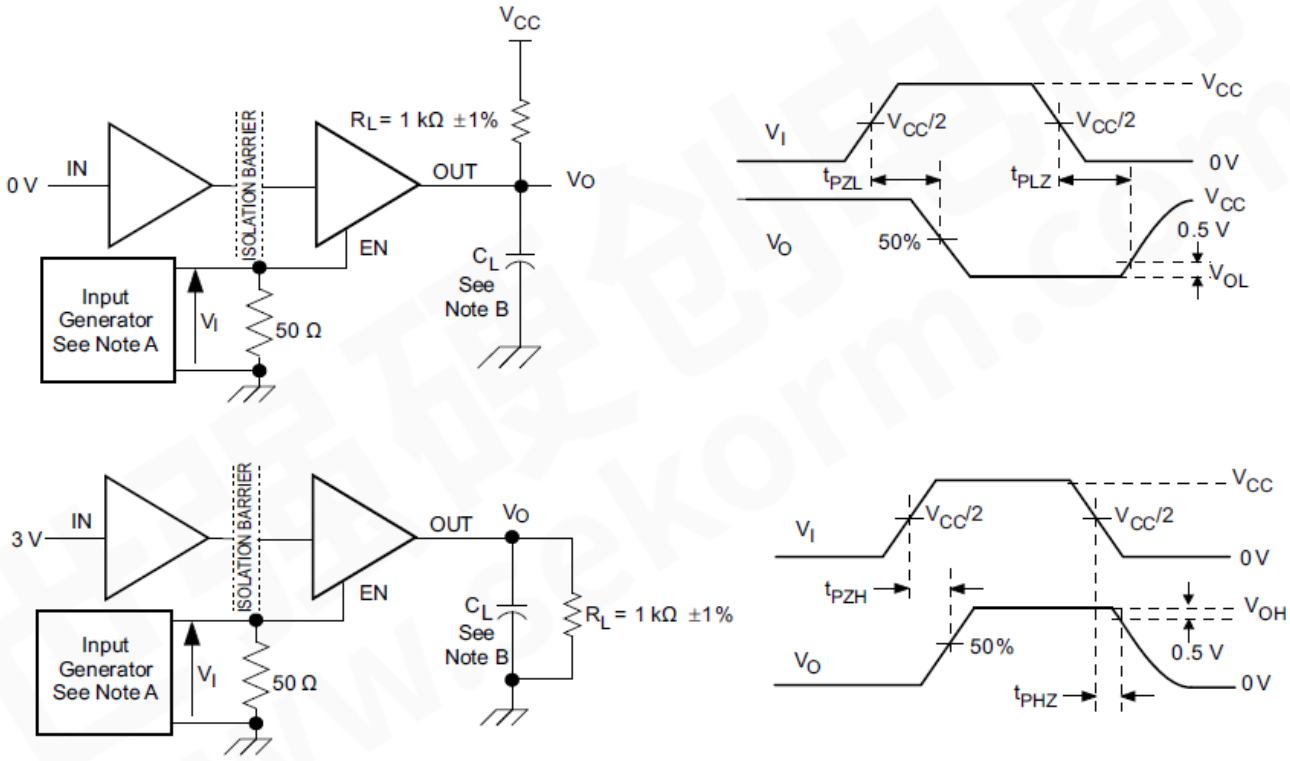

Figure 5.10 Enable/Disable Propagation Delay Time Test Circuit and Waveform

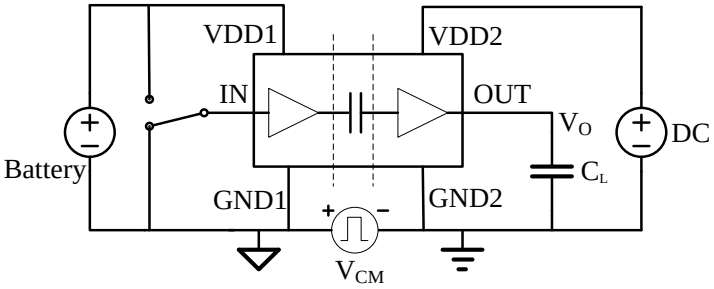

Figure 5.11 Common-Mode Transient Immunity Test Circuit

6. High Voltage Feature Description

6.1. Insulation and Safety Related Specifications

Description	*Test Condition*	*Symbol*	*Value*			*Unit*
			SOP16 (300mil)	SOP16 (600mil)	SSOP16	
Min. External Air Gap (Clearance)		CLR	8	15	3.9	mm
Min. External Tracking (Creepage)		CPG	8	15	3.9	mm
Distance through the Insulation		DTI	32		19	um
Comparative Tracking Index	DIN EN 60112 (VDE 0303-11)	CTI	>600		>400	V
Material Group	IEC 60112		I		II	
Installation Classification per DIN VDE 0110						
For Rated Mains Voltage ≤ 150Vrms			I to IV	I to IV	I to III	
For Rated Mains Voltage ≤ 300Vrms			I to IV	I to IV	I to II	
For Rated Mains Voltage ≤ 600Vrms			I to IV	I to IV	I	
For Rated Mains Voltage ≤ 1000Vrms			I to III	I to III	/	
Insulation Specification per DIN VDE V 0884-11:2017-01[1)]						
Climatic Category			40/125/21			
Pollution Degree	per DIN VDE 0110, Table 1		2			
Maximum Working Isolation Voltage	AC voltage	V_{IOWM}	1500	1500	400	V_{RMS}
	DC voltage		2121	2121	565	V_{DC}
Maximum Repetitive Isolation Voltage		V_{IORM}	2121	2121	565	V_{peak}
Input to Output Test Voltage, Method B1	$V_{ini.\ b} = V_{IOTM}$, $V_{pd(m)} = V_{IORM} \times 1.875$, $t_{ini} = t_m = 1$ sec, $q_{pd} \leq 5$ pC, 100% production test	$V_{pd\ (m)}$	3977	3977	/	V_{peak}
	$V_{ini.\ b} = V_{IOTM}$, $V_{pd(m)} = V_{IORM} \times 1.5$, $t_{ini} = t_m = 1$ sec, $q_{pd} \leq 5$ pC, 100% production test	$V_{pd\ (m)}$	/	/	847	V_{peak}
Input to Output Test Voltage, Method A. After Environmental Tests Subgroup 1	$V_{ini.\ a} = V_{IOTM}$, $V_{pd(m)} = V_{IORM} \times 1.6$, $t_{ini} = 60$ sec, $t_m = 10$ sec, $q_{pd} \leq 5$ pC	$V_{pd\ (m)}$	3394	3394	/	V_{peak}
	$V_{ini.\ a} = V_{IOTM}$, $V_{pd(m)} = V_{IORM} \times 1.3$, $t_{ini} = 60$ sec, $t_m = 10$ sec, $q_{pd} \leq 5$ pC	$V_{pd\ (m)}$	/	/	678	V_{peak}

Copyright © 2021, NOVOSENSE

Description	Test Condition	Symbol	Value			Unit
Input to Output Test Voltage, Method A. After Input and Output Safety Test Subgroup 2 and Subgroup 3	$V_{ini.a} = V_{IOTM}$, $V_{pd(m)} = V_{IORM} \times 1.2$, t_{ini} = 60 sec, t_m = 10 sec, $q_{pd} \leq 5$ pC	$V_{pd(m)}$	2545	2545	678	V_{peak}
Maximum Transient Isolation Voltage	t = 60 sec	V_{IOTM}	8000	8000	5000	V_{peak}
Maximum Surge Isolation Voltage	Test method per IEC62368-1, 1.2/50us waveform, $V_{TEST} = 1.6 \times V_{IOSM}$	V_{IOSM}	6250	6250	/	V_{peak}
	Test method per IEC62368-1, 1.2/50us waveform, $V_{TEST} = 1.3 \times V_{IOSM}$	V_{IOSM}	/	/	5384	V_{peak}
Isolation Resistance	V_{IO} = 500 V, $T_{amb} = T_S$	R_{IO}	$>10^9$			Ω
	V_{IO} = 500 V,100 °C ≤ T_{amb} ≤ 125 °C		$>10^{11}$			Ω
Isolation Capacitance	f = 1MHz	C_{IO}	1.2			pF
Insulation Specification per UL1577						
Withstand Isolation Voltage	$V_{TEST} = 1.2 \times V_{ISO}$, t = 1 sec, 100% production test	V_{ISO}	5000	5700	3000	V_{rms}

1) This coupler is suitable for "safe electrical insulation" only within the safety ratings. Compliance with the safety ratings shall be ensured by means of suitable protective circuits.

6.2. Safety-Limiting Values

Reinforced isolation safety-limiting values as outlined in VDE-0884-11 of NSI824x-DSWxR (SOP16(300mil)/SOP16(600mil))

Description	Test Condition	Value	Unit
Safety Supply Power	$R_{\theta JA}$ = 78.9 °C/W[1)], T_J = 150 °C, T_A = 25 °C	1584	mW
Safety Supply Current	$R_{\theta JA}$ = 78.9 °C/ W[1)], V_I = 5V, T_J = 150 °C, T_A = 25 °C	316.8	mA
Safety Temperature[2)]		150	°C

1) Calculate with the junction-to-air thermal resistance, $R_{\theta JA}$, of SOP16(300mil)/SOP16(600mil) package (*Thermal Information Table*) which is that of a device installed on a low effective thermal conductivity test board (1s) according to JESD51-3.

2) The maximum safety temperature has the same value as the maximum junction temperature (T_J) specified for the device.

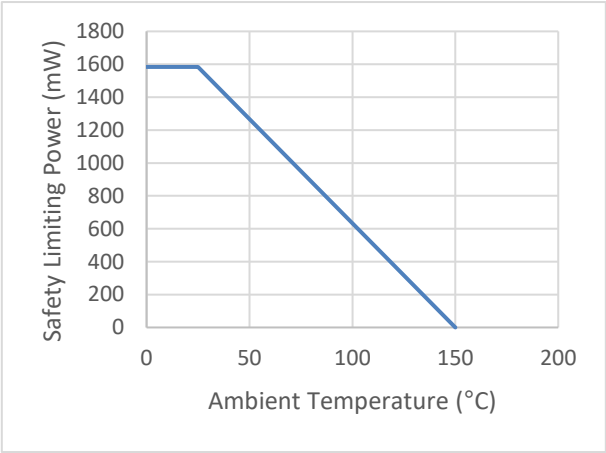

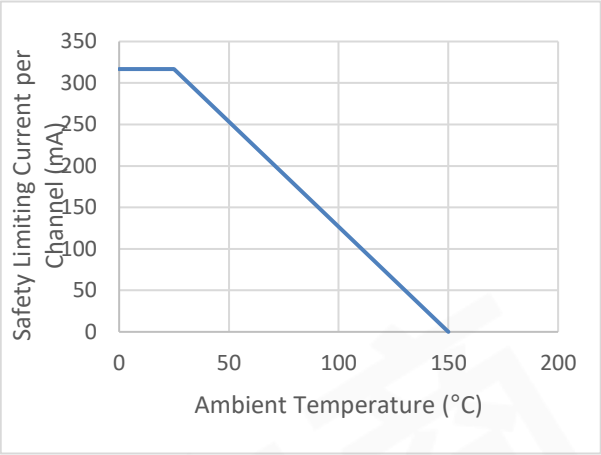

Figure 6.1 NSI824x Thermal derating Curve, Dependence of Safety Limiting Values with Case Temperature per DIN VDE V 0884-11

Basic isolation safety-limiting values as outlined in VDE-0884-11 of NSI824x-DSSR (SSOP16)

Description	*Test Condition*	*Value*	*Unit*
Safety Supply Power	$R_{\theta JA}$ = 140°C/W[1)], T_J = 150 °C, T_A = 25 °C	880	mW
Safety Supply Current	$R_{\theta JA}$ = 140°C/W[1)], V_I = 5V, T_J = 150 °C, T_A = 25 °C	176	mA
Safety Temperature[2)]		150	°C

1) Calculate with the junction-to-air thermal resistance, $R_{\theta JA}$, of SSOP16 package (*Thermal Information Table*) which is that of a device installed on a low effective thermal conductivity test board (1s) according to JESD51-3.

2) The maximum safety temperature has the same value as the maximum junction temperature (T_J) specified for the device.

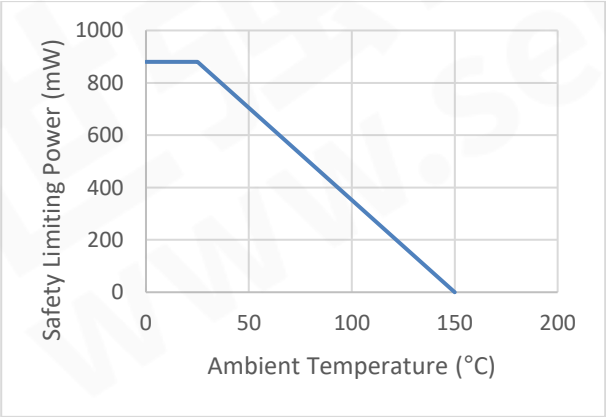

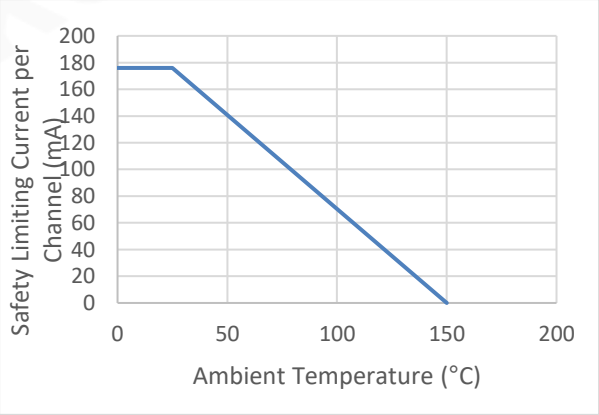

Figure 6.2 NSI824xS Thermal derating Curve, Dependence of Safety Limiting Values with Case Temperature per DIN VDE V 0884-11

Copyright © 2021, NOVOSENSE

6.3. Regulatory Information

The NSi824xW-DSWR are approved or pending approval by the organizations listed in table.

CUL		*VDE*	*CQC*
UL 1577 Component Recognition Program	Approved under CSA Component Acceptance Notice 5A	DIN VDE V 0884-11(VDE V 0884-11):2017-01	Certified by CQC11-471543-2012 GB4943.1-2011
Single Protection, 5000V_{rms} Isolation voltage	Single Protection, 5000V_{rms} Isolation voltage	Reinforce Insulation 2121Vpeak, V_{IOSM}=6250Vpeak	Reinforced insulation
File (**E500602**)	File (**E500602**)	File (40052820)	File (**CQC20001264939**)

The NSi824xW-DSWWR are approved or pending approval by the organizations listed in table.

CUL		*VDE*	*CQC*
UL 1577 Component Recognition Program	Approved under CSA Component Acceptance Notice 5A	DIN VDE V 0884-11(VDE V 0884-11):2017-01	Certified by CQC11-471543-2012 GB4943.1-2011
Single Protection, 5700V_{rms} Isolation voltage	Single Protection, 5700V_{rms} Isolation voltage	Reinforce Insulation 2121Vpeak, V_{IOSM}=6250Vpeak	Reinforced insulation
File (pending)	File (pending)	File (pending)	File (pending)

The NSi824xS-DSSR are approved or pending approval by the organizations listed in table.

CUL		*VDE*	*CQC*
UL 1577 Component Recognition Program	Approved under CSA Component Acceptance Notice 5A	DIN VDE V 0884-11(VDE V 0884-11):2017-01	Certified by CQC11-471543-2012 GB4943.1-2011
Single Protection, 3000V_{rms} Isolation voltage	Single Protection, 3000V_{rms} Isolation voltage	Basic Insulation 565Vpeak, V_{IOSM}=5384Vpeak	Basic insulation
File (pending)	File (pending)	File (pending)	File (pending)

Copyright © 2021, NOVOSENSE

7. Function Description

7.1. Overview

The NSi824x is a Quad-channel digital isolator based on a capacitive isolation barrier technique. The digital signal is modulated with RF carrier generated by the internal oscillator at the Transmitter side. Then it is transferred through the capacitive isolation barrier and demodulated at the Receiver side.

The NSi824x devices are high reliability quad-channel digital isolator with AEC-Q100 qualified. The NSi824x device is safety certified by UL1577 support 5kV$_{rms}$ insulation withstand voltages, while providing high electromagnetic immunity and low emissions at low power consumption. The data rate of the NSi824x is up to 150Mbps, and the common-mode transient immunity (CMTI) is up to 200kV/us. The NSi824x device provides digital channel direction configuration and the default output level configuration when the input power is lost. Wide supply voltage of the NSi824x device support to connect with most digital interface directly, easy to do the level shift. High system level EMC performance enhance reliability and stability of use.

The NSi824x has a default output status when VDDIN is unready and VDDOUT is ready as shown in Table 4.1, which helps for diagnosis when power is missing at the transmitter side. The output B follows the same status with the input A after powering up.

Table 7.1 Output status vs. power status

Input	*EN$_X$*	*VDD1 status*	*VDD2 status*	*Output*	*Comment*
H	H or NC	Ready	Ready	H	Normal operation.
L	H or NC	Ready	Ready	L	
X	L	Ready	Ready	Z	Output Disabled, the output is high impedance
X	H or NC	Unready	Ready	L(NSi824xx0) H(NSi824xx1)	The output follows the same status with the input after input side VDD1 is powered on.
X	L	Unready	Ready	Z	Output Disabled, the output is high impedance
X	X	Ready	Unready	X	The output follows the same status with the input after output side VDD2 is powered on.
Note: H=Logic high; L=Logic low; X=Logic low or logic high VDD1 is input side power;VDD2 is out side power.					

7.2. OOK Modulation

NSi824x is based on a capacitive isolation barrier technique and the digital signal is modulated with RF carrier generated by the internal oscillator at the transmitter side, as shown in Fig.1, then it is transferred through the capacitive isolation barrier and demodulated at the receiver side. The modulation uses OOK modulation technique with key benefits of high noise immunity and low radiation EMI.

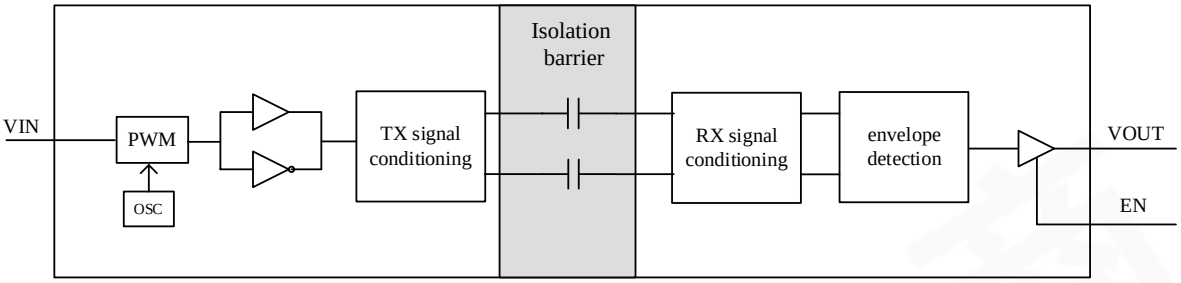

Figure 7.1 Single Channel Function Block Diagram

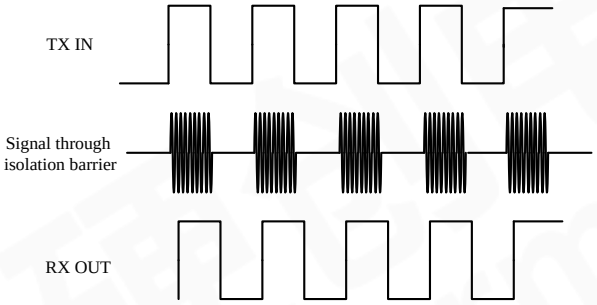

Figure 7.2 OOK Modulation

www.sekorm.com

8. Application Note

8.1. Typical Application Circuit

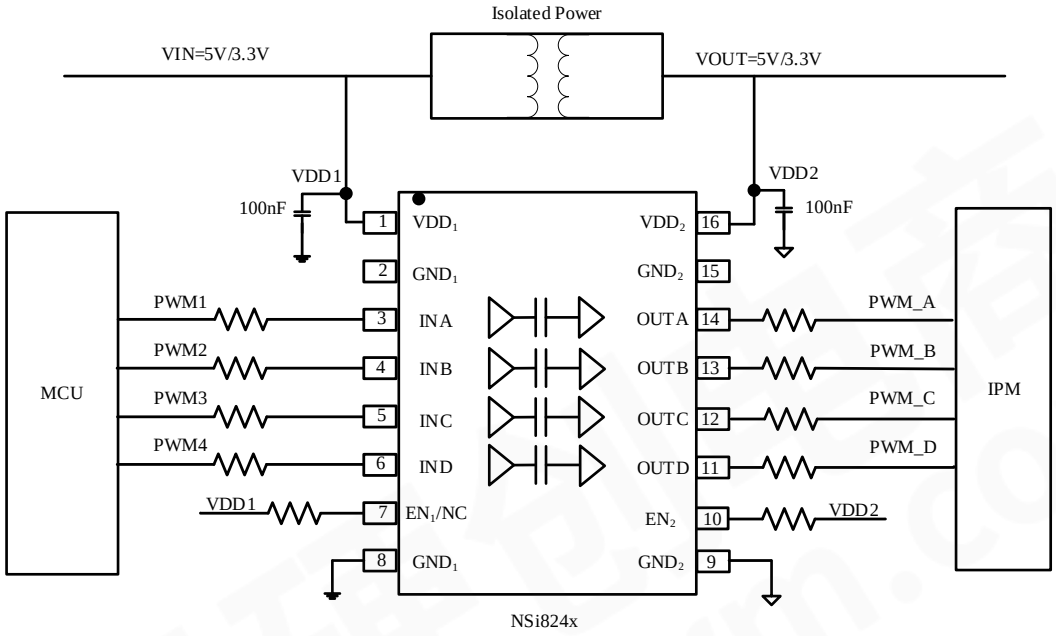

Figure 8.1 Typical PWM isolation circuit for IPM

8.2. PCB Layout

The NSi824x requires a 0.1 µF bypass capacitor between VDD1 and GND1, VDD2 and GND2. The capacitor should be placed as close as possible to the package. Figure 8.2 to Figure 8.3 show the recommended PCB layout, make sure the space under the chip should keep free from planes, traces, pads and via. To enhance the robustness of a design, the user may also include resistors (50–300 Ω) in series with the inputs and outputs if the system is excessively noisy. The series resistors also improve the system reliability such as latch-up immunity.

The typical output impedance of an isolator driver channel is approximately 50 Ω, ±40%. When driving loads where transmission line effects will be a factor, output pins should be appropriately terminated with controlled impedance PCB traces.

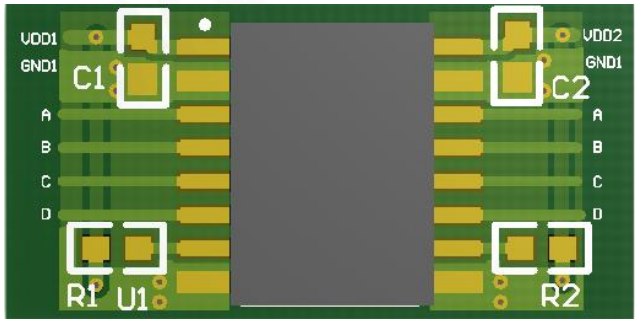

Figure8.2 Recommended PCB Layout — Top Layer

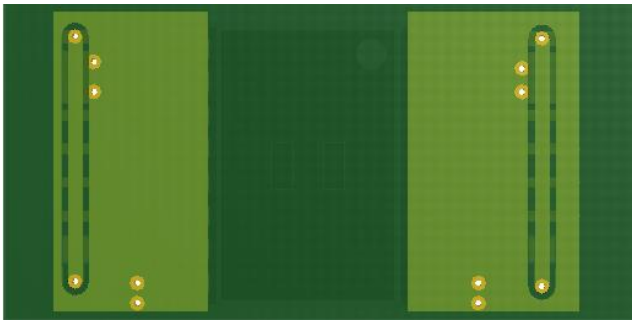

Figure8.3 Recommended PCB Layout — Bottom Layer

8.3. High Speed Performance

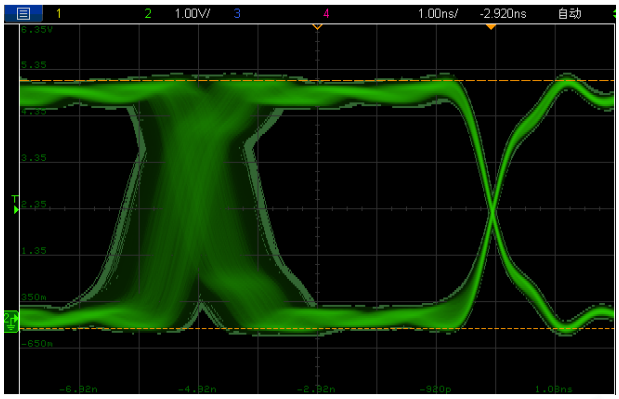

Figure8.4 Eye Diagram

8.4. Typical Supply Current Equations

The typical supply current of NSi824x can be calculated using below equations. I_{DD1} and I_{DD2} are typical supply currents measured in mA, f is data rate measured in Mbps, C_L is the capacitive load measured in pF

NSi8240:

I_{DD1} = 0.19 *a1+1.45*b1+0.82*c1.

I_{DD2} = 1.36+ VDD1*f* C_L *c1*10^{-9}

When a1 is the channel number of low input at side 1, b1 is the channel number of high input at side 1, c1 is the channel number of switch signal input at side 1.

NSi8241:

I_{DD1} = 0.87 +1.26*b1+0.63*c1+ VDD1*f* C_L *c2*10^{-9}

I_{DD2} = 0.87 +1.26*b2+0.63*c2+ VDD1*f* C_L *c1*10^{-9}

When b1 is the channel number of high input at side 1, c1 is the channel number of switch signal input at side 1, b2 is the channel number of high input at side 2, c2 is the channel number of switch signal input at side 2.

NSi8242:

I_{DD1} = 0.87 +1.26*b1+0.63*c1+ VDD1*f* C_L *c2*10^{-9}

I_{DD2} = 0.87 +1.26*b2+0.63*c2+ VDD1*f* C_L *c1*10^{-9}

When b1 is the channel number of high input at side 1, c1 is the channel number of switch signal input at side 1, b2 is the channel number of high input at side 2, c2 is the channel number of switch signal input at side 2.

Copyright © 2021, NOVOSENSE

9. Package Information

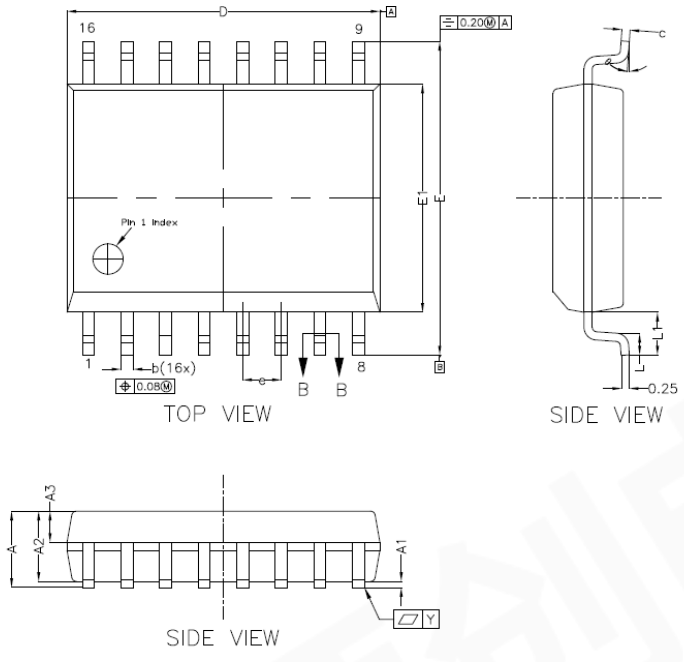

* CONTROLLING DIMENSION : MM

SYMBOL	MILLIMETER		
	MIN.	NOM.	MAX.
A	---	---	2.65
A1	0.10	---	030
A2	2.25	2.30	2.35
A3	0.97	1.02	1.07
b	0.35	---	0.43
c	0.23	---	0.32
D	10.20	10.30	10.40
E	10.10	10.30	10.50
E1	7.40	7.50	7.60
e	1.27 bsc		
L1	1.40 bsc		
L	0.55	---	0.85
Y	---	0.10	---
θ	0°	---	8°

NOTES

1.0 COPLANARITY APPLIES TO LEADS, CORNER LEADS AND DIE ATTACH PAD.

Figure 9.1 SOP16(300mil) Package Shape and Dimension in millimeters

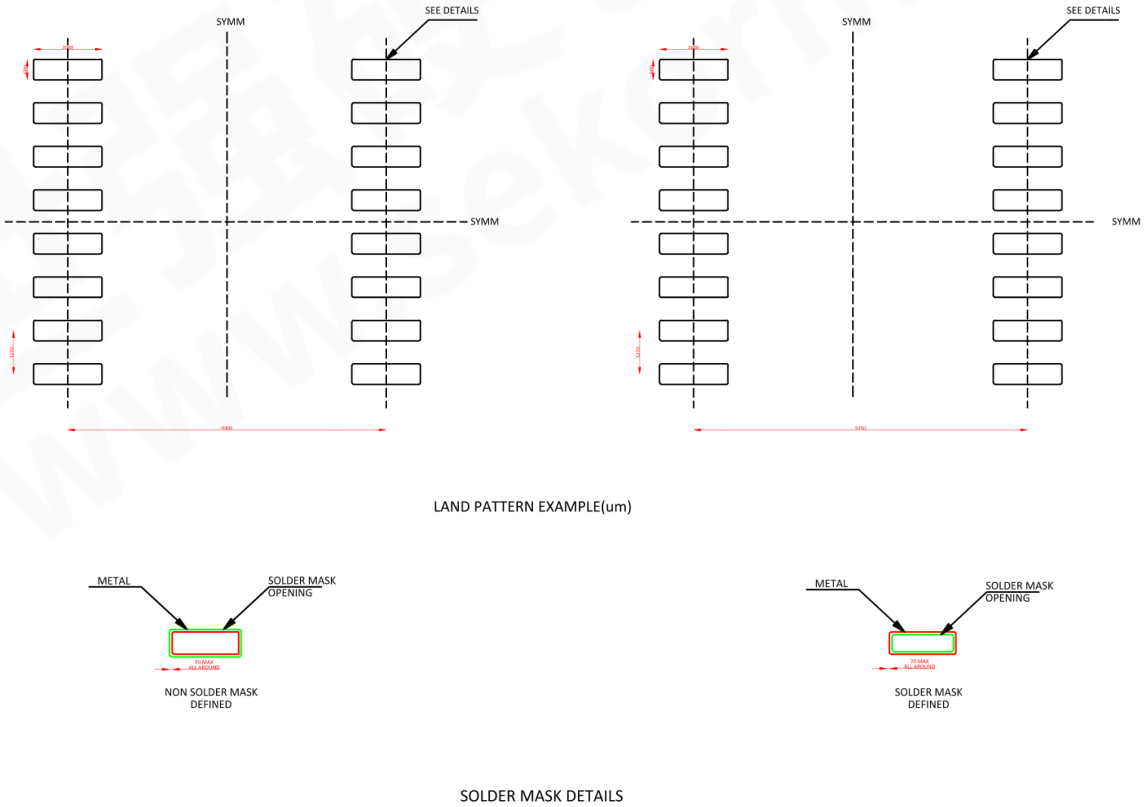

Figure 9.2 SOP16(300mil) Package Board Layout Example

Copyright © 2021, NOVOSENSE

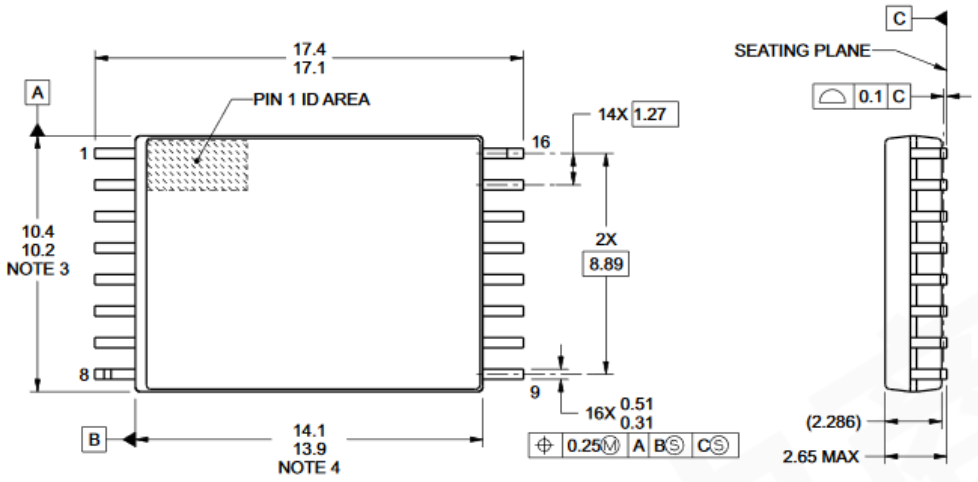

Figure 9.3 SOP16(600mil) Package Shape and Dimension in millimeters

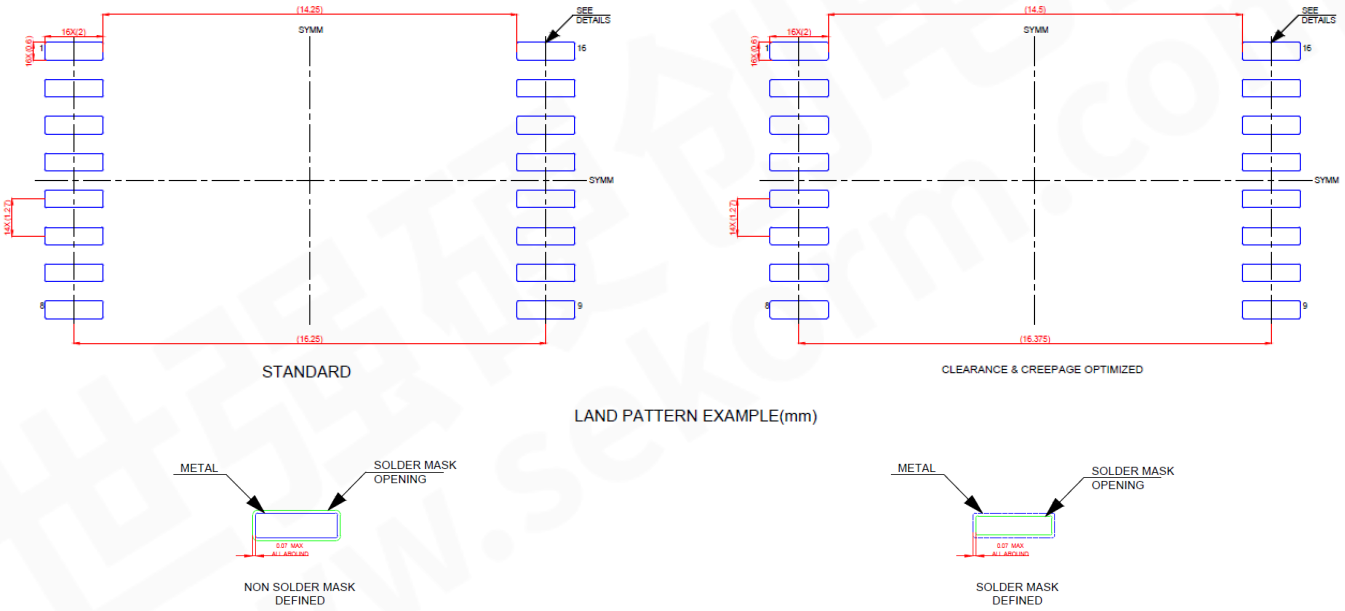

Figure 9.4 SOP16(600mil) Package Board Layout Example

Copyright © 2021, NOVOSENSE

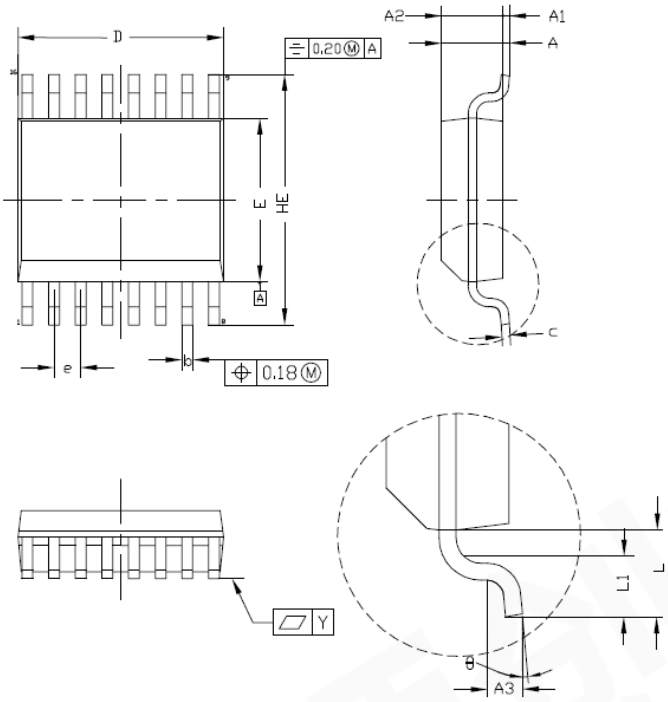

* CONTROLLING DIMENSION : MM

SYMBOL	MILLIMETER			INCH		
	MIN.	NOM.	MAX.	MIN.	NOM.	MAX.
A	---	---	1.73	---	---	0.068
A1	0.10	---	0.25	0.004	---	0.010
A2	1.40	---	1.55	0.055	---	0.061
b	0.20	---	0.31	0.008	---	0.012
c	0.18	---	0.25	0.007	---	0.010
D	4.80	---	5.00	0.189	---	0.197
E	3.80	---	4.00	0.150	---	0.157
HE	5.80	---	6.20	0.228	---	0.244
e	0.635 bsc			0.025 bsc		
L	1.00 bsc			0.039 bsc		
L1	0.41	---	0.89	0.016	---	0.035
Y	---	0.09	---	---	0.004	---
A3	---	0.25	---	---	0.010	---
θ	0°	---	8°	0°	---	8°

Figure 9.5 SSOP16 Package Shape and Dimension in millimeters

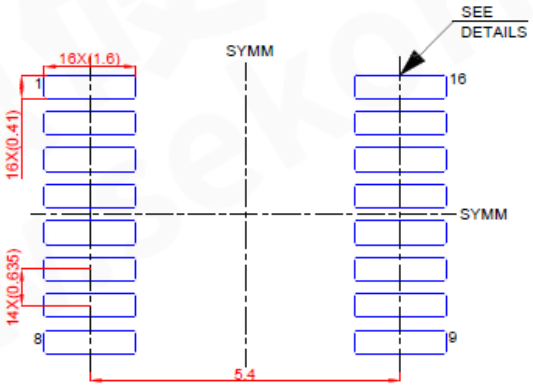

LAND PATTERN EXAMPLE(mm)

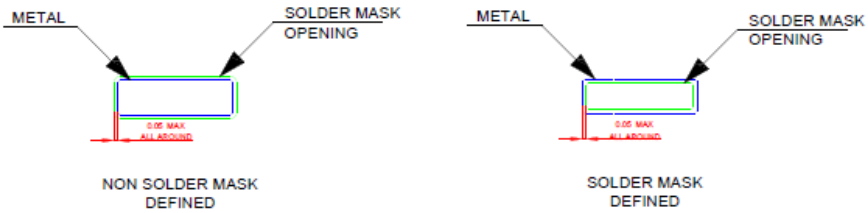

Figure 9.6 SSOP16 Package Board Layout Example

10. Order Information

Part Number	*Isolation Rating (kV)*	*Number of side 1 inputs*	*Number of side 2 inputs*	*Max Data Rate (Mbps)*	*Default Output State*	*Temperature*	*MSL*	*Package Type*	*Package Drawing*	*SPQ*
NSi8240W0-DSWR	5	4	0	150	Low	-55 to 125℃	2	SOP16 (300mil)	SOW16	1000
NSi8240W1-DSWR	5	4	0	150	High	-55 to 125℃	2	SOP16 (300mil)	SOW16	1000
NSi8241W0-DSWR	5	3	1	150	Low	-55 to 125℃	2	SOP16 (300mil)	SOW16	1000
NSi8241W1-DSWR	5	3	1	150	High	-55 to 125℃	2	SOP16 (300mil)	SOW16	1000
NSi8242W0-DSWR	5	2	2	150	Low	-55 to 125℃	2	SOP16 (300mil)	SOW16	1000
NSi8242W1-DSWR	5	2	2	150	High	-55 to 125℃	2	SOP16 (300mil)	SOW16	1000
NSi8240W0-DSWWR	5.7	4	0	150	Low	-55 to 125℃	2	SOP16 (600mil)	SOWW16	1000
NSi8240W1-DSWWR	5.7	4	0	150	High	-55 to 125℃	2	SOP16 (600mil)	SOWW16	1000
NSi8241W0-DSWWR	5.7	3	1	150	Low	-55 to 125℃	2	SOP16 (600mil)	SOWW16	1000
NSi8241W1-DSWWR	5.7	3	1	150	High	-55 to 125℃	2	SOP16 (600mil)	SOWW16	1000
NSi8242W0-DSWWR	5.7	2	2	150	Low	-55 to 125℃	2	SOP16 (600mil)	SOWW16	1000
NSi8242W1-DSWWR	5.7	2	2	150	High	-55 to 125℃	2	SOP16 (600mil)	SOWW16	1000
NSi8240S0-DSSR	3	4	0	150	Low	-55 to 125℃	1	SSOP16	SSOP16	2500
NSi8240S1-DSSR	3	4	0	150	High	-55 to 125℃	1	SSOP16	SSOP16	2500
NSi8241S0-DSSR	3	3	1	150	Low	-55 to 125℃	1	SSOP16	SSOP16	2500
NSi8241S1-DSSR	3	3	1	150	High	-55 to 125℃	1	SSOP16	SSOP16	2500
NSi8242S0-DSSR	3	2	2	150	Low	-55 to 125℃	1	SSOP16	SSOP16	2500
NSi8242S1-DSSR	3	2	2	150	High	-55 to 125℃	1	SSOP16	SSOP16	2500

NOTE: All packages are RoHS-compliant with peak reflow temperatures of 260 °C according to the JEDEC industry standard classifications and peak solder temperatures.
All devices are AEC-Q100 qualified.

Copyright © 2021, NOVOSENSE

Part Number Rule:

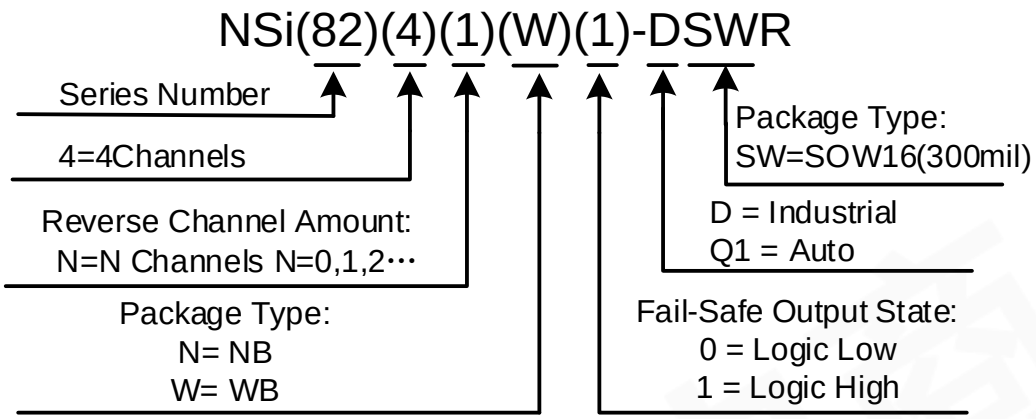

11. Documentation Support

Part Number	*Product Folder*	*Datasheet*	*Technical Documents*	*Isolator selection guide*
NSi824x	Click here	Click here	Click here	Click here

Copyright © 2021, NOVOSENSE

12. Tape and Reel Information

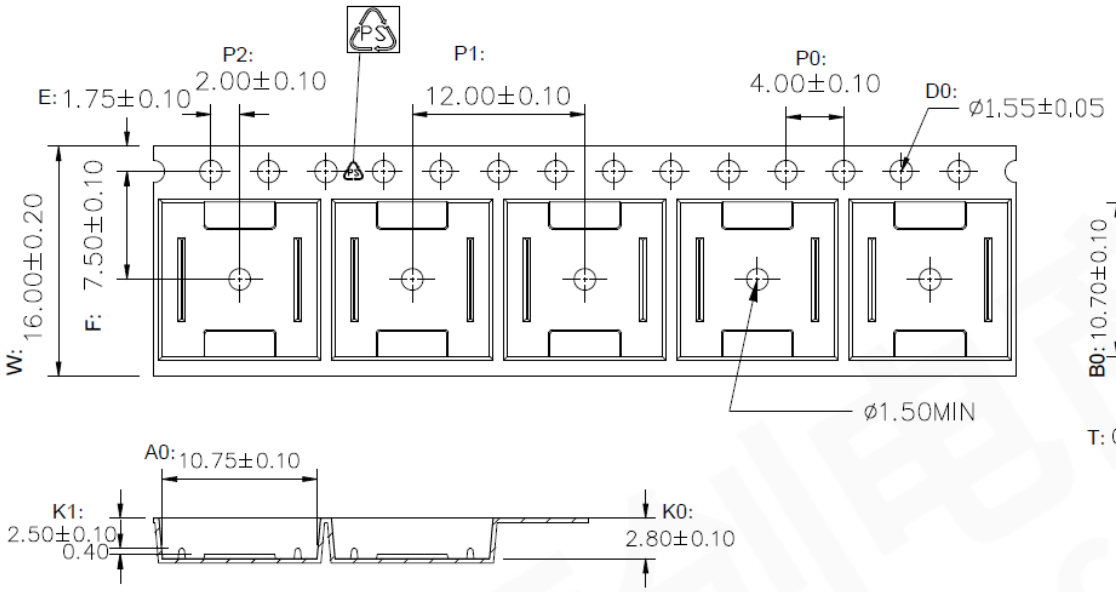

1. 10 sprocket hole pitch cumulative tolerance ±0.20 .
2. Carrier camber is within 1 mm in 250 mm.
3. Material : Black Conductive Polystyrene Alloy .
4. All dimensions meet EIA-481 requirements.
5. Thickness : 0.30±0.05mm.
6. Packing length per 22" reel : 378 Meters.(復卷 N=122)
7. Component load per 13" reel : 1000 pcs.
8. Surface resistivity : $10^{5} \sim 10^{10}\ \Omega/\square$

W	16.00±0.20
A0	10.75±0.10
B0	10.70±0.10
K0	2.80±0.10
K1	2.50±0.10

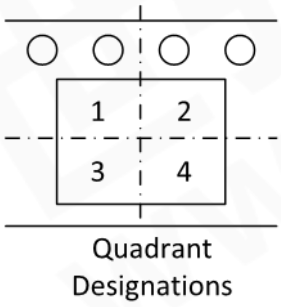

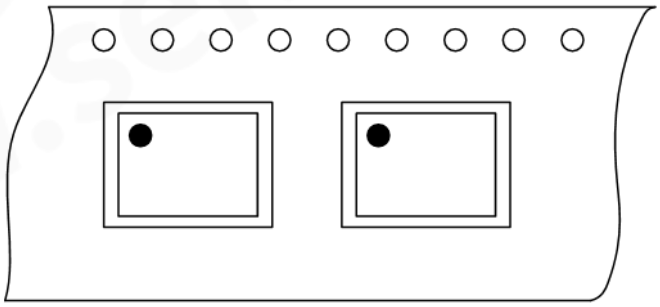

Figure 12.1 Tape and Reel Information of SOP16(300mil)

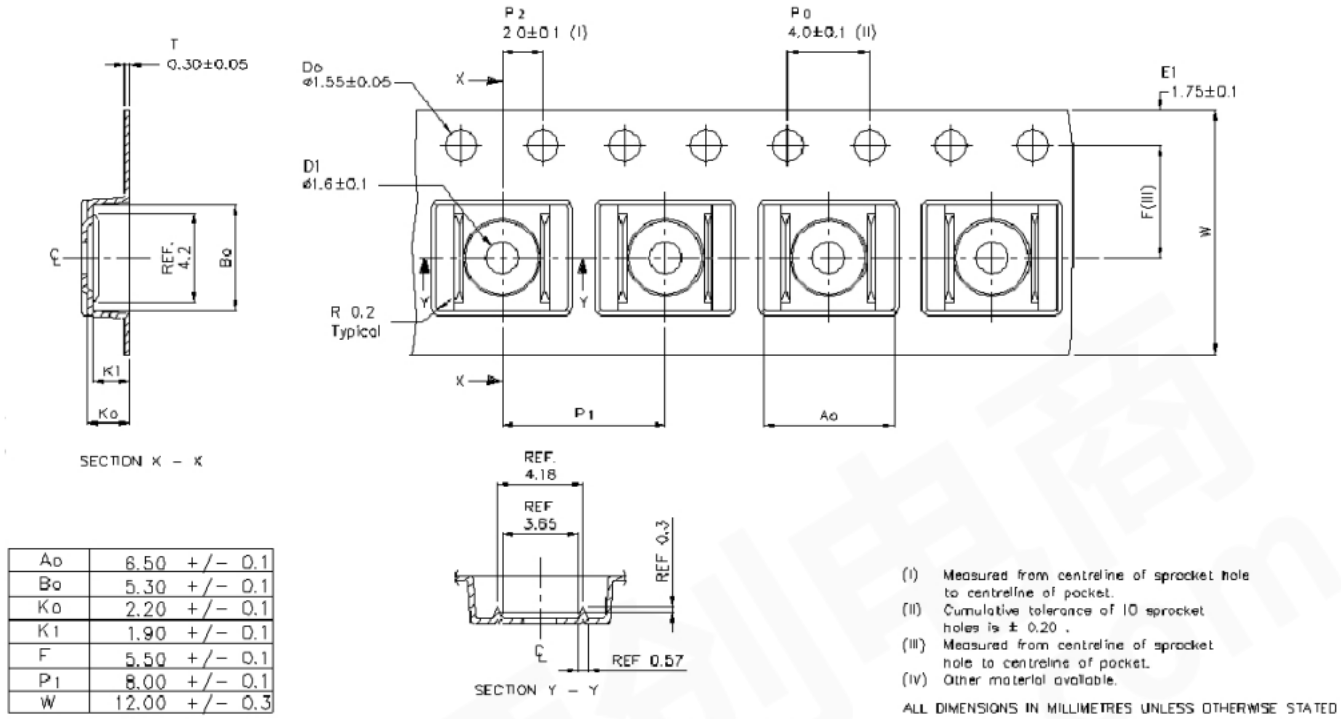

Ao	6.50	+/− 0.1
Bo	5.30	+/− 0.1
Ko	2.20	+/− 0.1
K1	1.90	+/− 0.1
F	5.50	+/− 0.1
P1	8.00	+/− 0.1
W	12.00	+/− 0.3

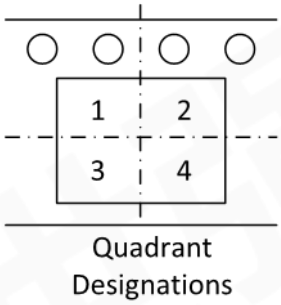

Quadrant Designations

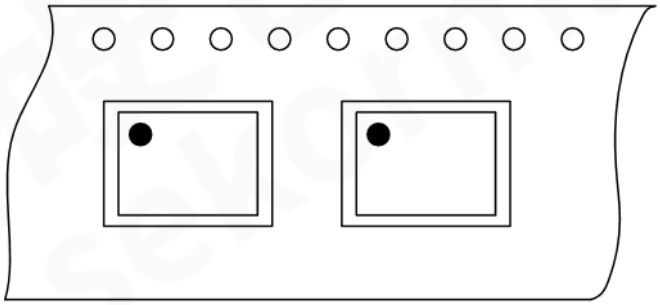

Figure 12.2 Tape and Reel Information of SSOP16

13. Revision History

Revision	Description	Date
1.0	Initial version	2020/11/13
1.1	Changed tape and reel information	2020/12/20
1.2	Operating temperature support-55 to 125 ℃	2021/7/7
1.3	Update Package Board Layout Example, update CQC information, Add SSOP16 package products	2021/12/29

世强硬创电商 www.sekorm.com