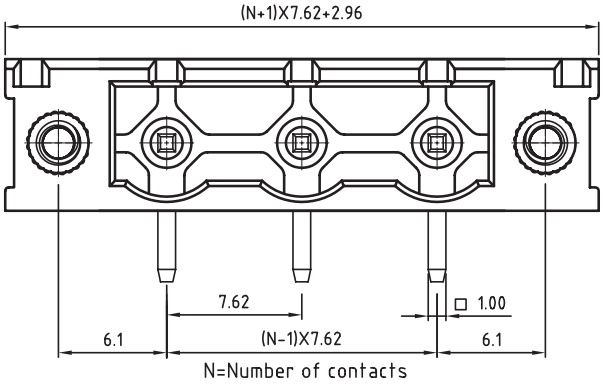

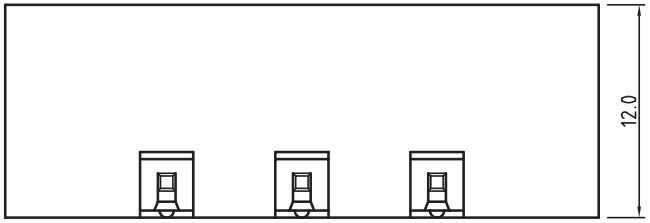

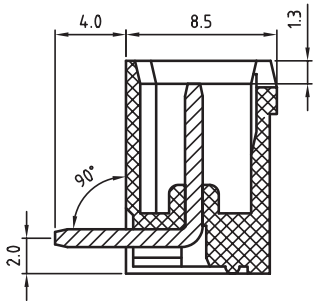

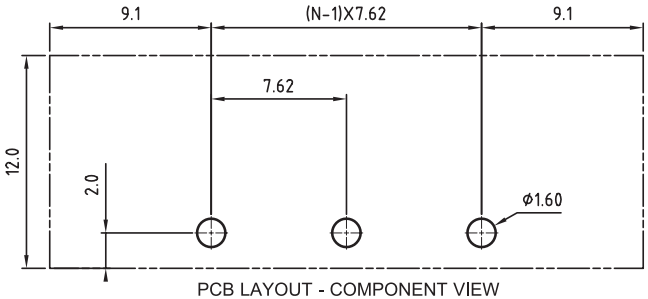

PCB LAYOUT - COMPONENT VIEW

TECHNICAL CHARACTERISTICS

MATERIAL
INSULATOR: PA66
FLAMABILITY RATING: UL94-V0
COLOR: GREEN
CONTACT: BRASS
SOLDER TAIL PLATING: TIN
FLANGES SCREW NUT: BRASS M2.5

ENVIRONMENTAL
OPERATING TEMPERATURE: -40 UP TO 105°C
COMPLIANCE: LEAD FREE AND ROHS

ELECTRICAL	cULus
CURRENT RATING:	20A
WORKING VOLTAGE:	300VAC
WITHSTANDING VOLTAGE:	1.6KV
CONTACT RESISTANCE:	20 mOhm max

STANDARD
cULus CERTIFIED E315414

MECHANICAL
PITCH: 7.62MM

SOLDERING: WAVE PROCESS ONLY

PACKAGING: BOX

RoHS Compliant

REV	DATE	FILE	BY
G			
F			
E			
D			
C	25-FEV-22	PBT -> PA66	AK
B	16-OCT-09	STANDARD	JP
A	05-NOV-08	PDF	JP

PROJECTION:

GENERAL TOLERANCE
.X = +/- 0.2
.XX = +/- 0.15

APPROVAL: JHe

UNIT: MM
SCALE:
SHEET: 1/1
DRAW: MARVIN

WÜRTH ELEKTRONIK

DESCRIPTION: SERIE 3174 - 7.62MM CLOSE HORIZONTAL PCB HEADER WITH FLANGES WR-TBL

WERI PART NO: 691 317 410 0xx

SIZE **A4**

Mouser Electronics

Authorized Distributor

Click to View Pricing, Inventory, Delivery & Lifecycle Information:

Wurth Elektronik:
691317410008