PA0108C-R Proto Advantage

Datasheet revision 1.1 www.Proto-Advantage.com

PLCC-68/JLCC-68/LCC-68 (Pin 1 Out) *Compact Series* to PGA-68 SMT Adapter (1.27 mm pitch, 25 x 25 mm body)

DIMENSIONS						
REF.	mm			inches		
	MIN.	TYP.	MAX.	MIN.	TYP.	MAX.
A		21.75				
A2		21.75				
B		2.75				
C		0.80				
D		0.47				
E		1.27				
F					0.1	
G					0.1	
H		0.46				
X					1.1	
Y					1.1	

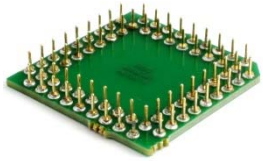

Top View (SMT Footprint)

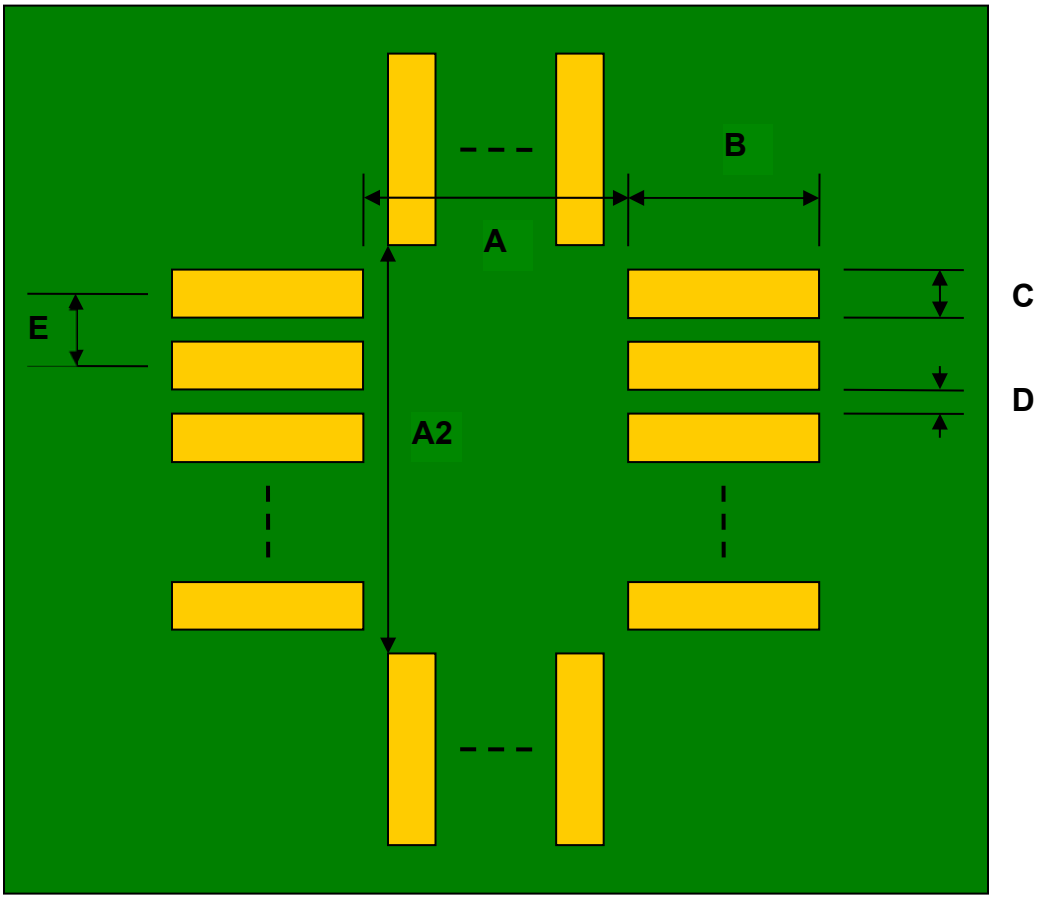

(Representative drawing only - not to scale)

© 2007-2021 Proto Advantage™

Bottom View (PGA Pins)

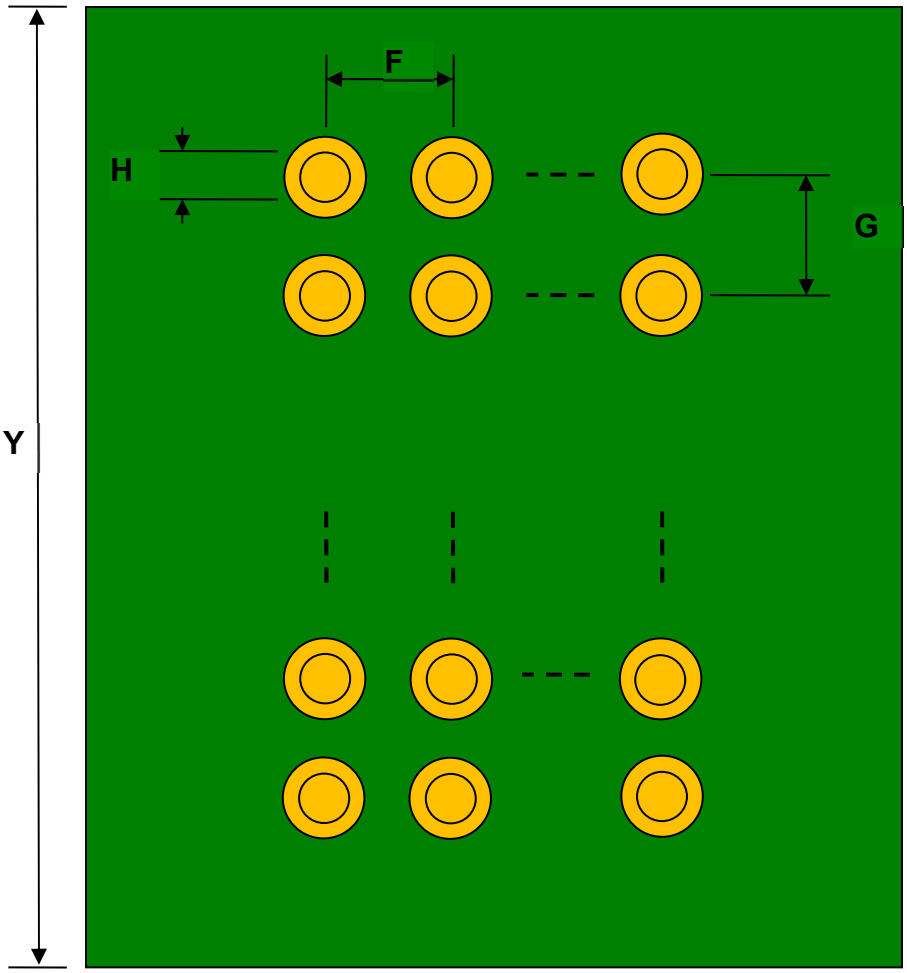

(Representative drawing only - not to scale)

Side View (PGA Pins)

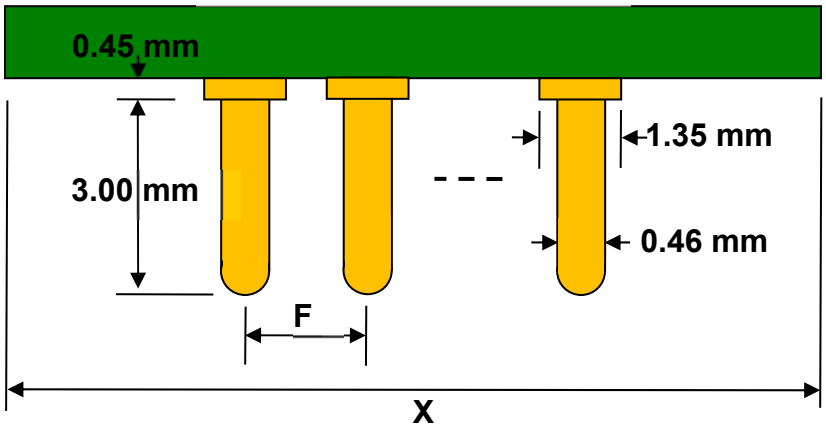

(Representative drawing only - not to scale)

© 2007-2021 Proto Advantage™

Adapter Pin Out (Top Side)

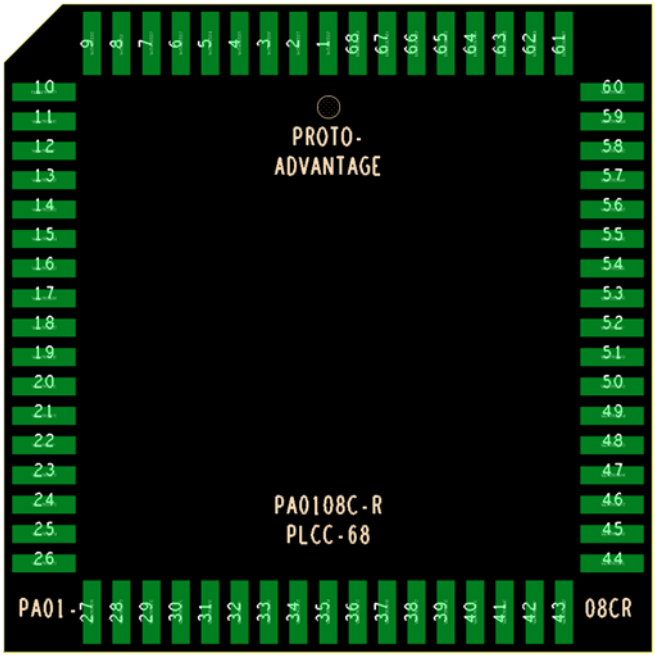

Adapter Pin Out (Bottom Side) (X-Ray View)

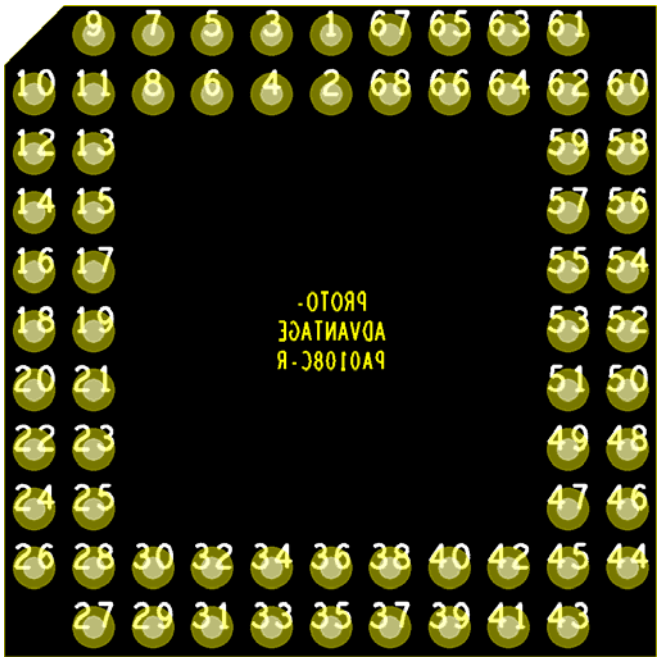

© 2007-2021 Proto Advantage™

Mouser Electronics

Authorized Distributor

Click to View Pricing, Inventory, Delivery & Lifecycle Information:

Chip Quik:
PA0108C-R