IXYS
INTEGRATED CIRCUITS DIVISION

IXD_602
2-Ampere Dual Low-Side Ultrafast MOSFET Drivers

Features

- 2A Peak Source/Sink Drive Current
- Wide Operating Voltage Range: 4.5V to 35V
- -40°C to +125°C Extended Operating Temperature Range
- Logic Input Withstands Negative Swing of up to 5V
- Outputs May be Connected in Parallel for Higher Drive Current
- Matched Rise and Fall Times
- Low Propagation Delay Time
- Low 10µA Supply Current
- Low Output Impedance

Applications

- Efficient Power MOSFET and IGBT Switching
- Switch Mode Power Supplies
- Motor Controls
- DC to DC Converters
- Class-D Switching Amplifiers
- Pulse Transformer Driver

Description

The IXDF602/IXDI602/IXDN602 dual high-speed gate drivers are especially well suited for driving the latest IXYS MOSFETs and IGBTs. Each of the two outputs can source and sink 2A of peak current while producing voltage rise and fall times of less than 10ns. The input of each driver is CMOS compatible, and is virtually immune to latch up. Proprietary circuitry eliminates cross conduction and current "shoot-through." Low propagation delay and fast, matched rise and fall times make the IXD_602 family ideal for high-frequency and high-power applications.

The IXDN602 is configured as a dual non-inverting driver, the IXDI602 is configured as a dual inverting driver, and the IXDF602 has one inverting and one non-inverting driver.

The IXD_602 family is available in a standard 8-pin DIP (PI), an 8-pin SOIC (SIA), an 8-pin Power SOIC with an exposed metal back (SI), and an 8-pin DFN (D2) package.

Ordering Information

Part Number	Logic Configuration	Package Type	Packing Method	Quantity
IXDF602D2TR	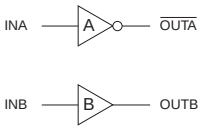	8-Pin DFN	Tape & Reel	2000
IXDF602PI		8-Pin DIP	Tube	50
IXDF602SI		8-Pin Power SOIC with Exposed Metal Back	Tube	100
IXDF602SITR		8-Pin Power SOIC with Exposed Metal Back	Tape & Reel	2000
IXDF602SIA		8-Pin SOIC	Tube	100
IXDF602SIATR		8-Pin SOIC	Tape & Reel	2000
IXDI602D2TR	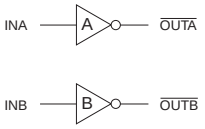	8-Pin DFN	Tape & Reel	2000
IXDI602PI		8-Pin DIP	Tube	50
IXDI602SI		8-Pin Power SOIC with Exposed Metal Back	Tube	100
IXDI602SITR		8-Pin Power SOIC with Exposed Metal Back	Tape & Reel	2000
IXDI602SIA		8-Pin SOIC	Tube	100
IXDI602SIATR		8-Pin SOIC	Tape & Reel	2000
IXDN602D2TR	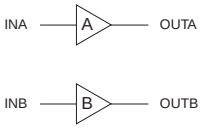	8-Pin DFN	Tape & Reel	2000
IXDN602PI		8-Pin DIP	Tube	50
IXDN602SI		8-Pin Power SOIC with Exposed Metal Back	Tube	100
IXDN602SITR		8-Pin Power SOIC with Exposed Metal Back	Tape & Reel	2000
IXDN602SIA		8-Pin SOIC	Tube	100
IXDN602SIATR		8-Pin SOIC	Tape & Reel	2000

Downloaded from Arrow.com.

1. Specifications . . . 3
1.1 Pin Configurations . . . 3
1.2 Pin Definitions . . . 3
1.3 Absolute Maximum Ratings . . . 3
1.4 Recommended Operating Conditions . . . 3
1.5 Electrical Characteristics: T_A = 25°C . . . 4
1.6 Electrical Characteristics: T_A = - 40°C to +125°C . . . 4
1.7 Thermal Characteristics . . . 5

2. IXD_602 Performance . . . 5
2.1 Timing Diagrams . . . 5
2.2 Characteristics Test Diagram . . . 5

3. Block Diagrams & Truth Tables . . . 6
3.1 IXDI602 . . . 6
3.2 IXDF602 . . . 6
3.3 IXDN602 . . . 6

4. Typical Performance Characteristics . . . 7

5. Manufacturing Information . . . 10
5.1 Moisture Sensitivity . . . 10
5.2 ESD Sensitivity . . . 10
5.3 Soldering Profile . . . 10
5.4 Board Wash . . . 10
5.5 Mechanical Dimensions . . . 11

Downloaded from Arrow.com.

1 Specifications

1.1 Pin Configurations

IXDF602

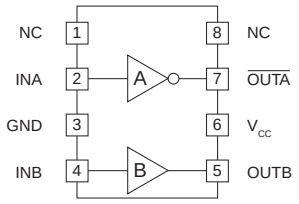

IXDI602

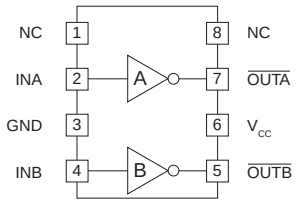

IXDN602

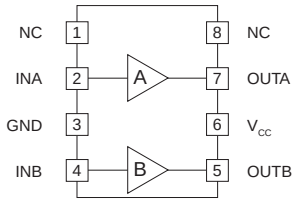

1.2 Pin Definitions

Pin Name	Description
INA	Channel A Logic Input
INB	Channel B Logic Input
OUTA $\overline{OUTA}$	Channel A Output - Sources or sinks current to turn-on or turn-off a discrete MOSFET or IGBT
OUTB $\overline{OUTB}$	Channel B Output - Sources or sinks current to turn on or turn off a discrete MOSFET or IGBT
V_{CC}	Supply Voltage - Provides power to the device
GND	Ground - Common ground reference for the device

1.3 Absolute Maximum Ratings

Parameter	Symbol	Minimum	Maximum	Units
Supply Voltage	V_{CC}	-0.3	40	V
Input Voltage	V_{IN}	-5.0	V_{CC}+0.3	V
Output Current	I_{OUT}	-	±2	A
Junction Temperature	T_J	-55	+150	°C
Storage Temperature	T_{STG}	-65	+150	°C

Unless otherwise specified, absolute maximum electrical ratings are at 25°C

Absolute maximum ratings are stress ratings. Stresses in excess of these ratings can cause permanent damage to the device. Functional operation of the device at conditions beyond those indicated in the operational sections of this data sheet is not implied.

1.4 Recommended Operating Conditions

Parameter	Symbol	Range	Units
Supply Voltage	V_{CC}	4.5 to 35	V
Operating Temperature Range	T_A	-40 to +125	°C

Downloaded from Arrow.com.

1.5 Electrical Characteristics: T_A = 25°C

Test Conditions: 4.5V ≤ V_{CC} ≤ 35V, one channel (unless otherwise noted).

Parameter	Conditions	Symbol	Minimum	Typical	Maximum	Units
Input Voltage, High	4.5V ≤ V_{CC} ≤ 18V	V_{IH}	3.0	-	-	V
Input Voltage, Low	4.5V ≤ V_{CC} ≤ 18V	V_{IL}	-	-	0.8	
Input Current	0V ≤ V_{IN} ≤ V_{CC}	I_{IN}	-	-	±10	µA
Output Voltage, High	-	V_{OH}	V_{CC}-0.025	-	-	V
Output Voltage, Low	-	V_{OL}	-	-	0.025	
Output Resistance, High State	V_{CC}=18V, I_{OUT}=-10mA	R_{OH}	-	2.5	4	Ω
Output Resistance, Low State	V_{CC}=18V, I_{OUT}=10mA	R_{OL}	-	1.5	3	
Output Current, Continuous	Limited by package power dissipation	I_{DC}	-	-	±1	A
Rise Time	V_{CC}=18V, C_{LOAD}=1000pF	t_r	-	7.5	15	ns
Fall Time	V_{CC}=18V, C_{LOAD}=1000pF	t_f	-	6.5	15	
On-Time Propagation Delay	V_{CC}=18V, C_{LOAD}=1000pF	t_{ondly}	-	35	60	
Off-Time Propagation Delay	V_{CC}=18V, C_{LOAD}=1000pF	t_{offdly}	-	38	60	
Power Supply Current	V_{CC}=18V, V_{IN}=3.5V	I_{CC}	-	1	3	mA
	V_{CC}=18V, V_{IN}=0V		-	<1	10	µA
	V_{CC}=18V, V_{IN}=V_{CC}		-	<1	10	

1.6 Electrical Characteristics: T_A = - 40°C to +125°C

Test Conditions: 4.5V ≤ V_{CC} ≤ 35V, one channel (unless otherwise noted).

Parameter	Conditions	Symbol	Minimum	Maximum	Units
Input Voltage, High	4.5V ≤ V_{CC} ≤ 18V	V_{IH}	3.3	-	V
Input Voltage, Low	4.5V ≤ V_{CC} ≤ 18V	V_{IL}	-	0.65	
Input Current	0V ≤ V_{IN} ≤ V_{CC}	I_{IN}	-10	10	µA
Output Voltage, High	-	V_{OH}	V_{CC}-0.025	-	V
Output Voltage, Low	-	V_{OL}	-	0.025	
Output Resistance, High State	V_{CC}=18V, I_{OUT}=-10mA	R_{OH}	-	6	Ω
Output Resistance, Low State	V_{CC}=18V, I_{OUT}=10mA	R_{OL}	-	5	
Output Current, Continuous	Limited by package power dissipation	I_{DC}	-	±1	A
Rise Time	V_{CC}=18V, C_{LOAD}=1000pF	t_r	-	18	ns
Fall Time	V_{CC}=18V, C_{LOAD}=1000pF	t_f	-	18	
On-Time Propagation Delay	V_{CC}=18V, C_{LOAD}=1000pF	t_{ondly}	-	75	
Off-Time Propagation Delay	V_{CC}=18V, C_{LOAD}=1000pF	t_{offdly}	-	75	
Power Supply Current	V_{CC}=18V, V_{IN}=3.5V	I_{CC}	-	3.5	mA
	V_{CC}=18V, V_{IN}=0V		-	150	µA
	V_{CC}=18V, V_{IN}=V_{CC}		-	150	

Downloaded from Arrow.com.

1.7 Thermal Characteristics

Package	Parameter	Symbol	Rating	Units
IXDD602D2 (8-Pin DFN)	Thermal Resistance, Junction-to-Ambient	θ_{JA}	35	°C/W
IXD_602PI (8-Pin DIP)			125	
IXD_602SI (8-Pin Power SOIC)			85	
IXD_602SIA (8-Pin SOIC)			120	
IXD_602SI (8-Pin Power SOIC)	Thermal Resistance, Junction-to-Case	θ_{JC}	10	°C/W

2 IXD_602 Performance

2.1 Timing Diagrams

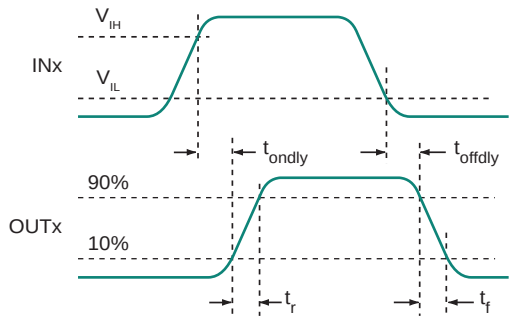

Non-Inverting Driver Waveforms

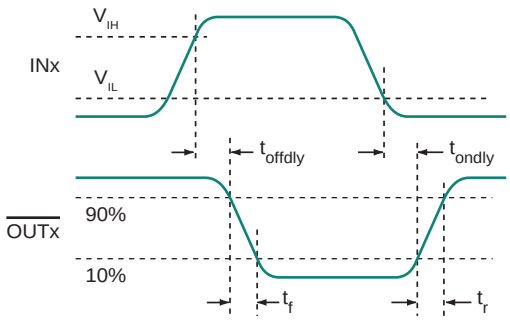

Inverting Driver Waveforms

2.2 Characteristics Test Diagram

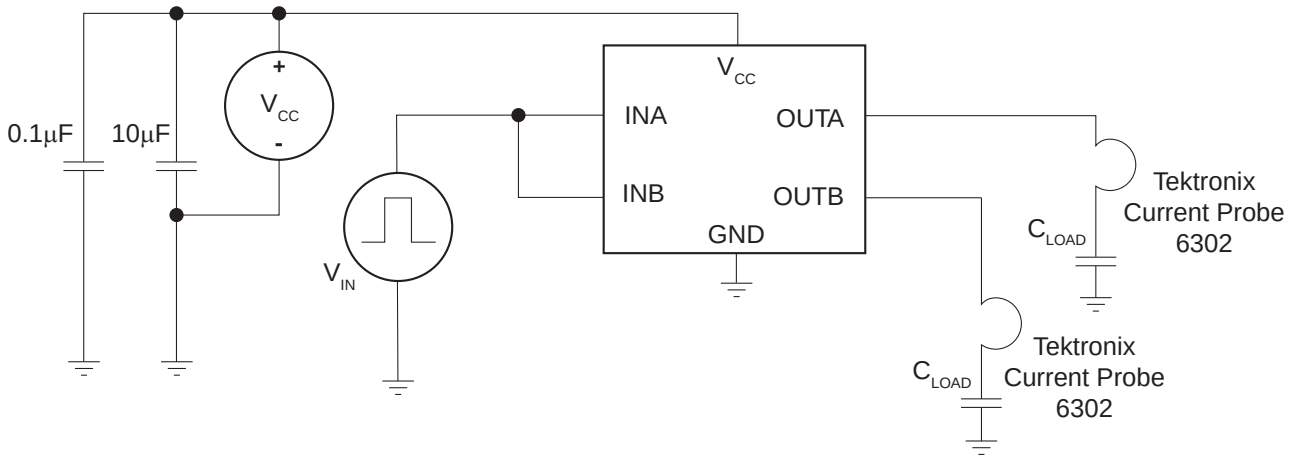

Downloaded from Arrow.com.

3 Block Diagrams & Truth Tables

3.1 IXDI602

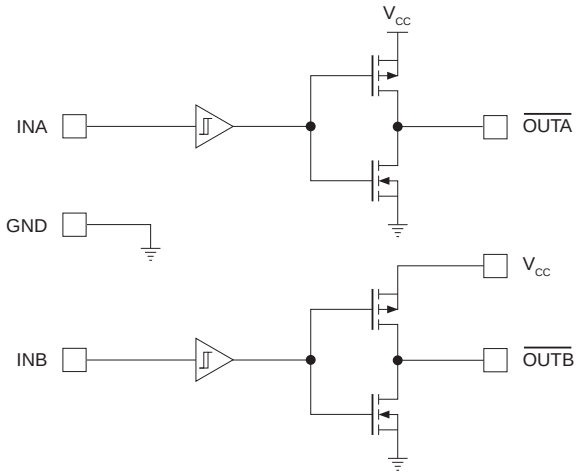

IN_X	$\overline{OUT_X}$
0	1
1	0

3.2 IXDF602

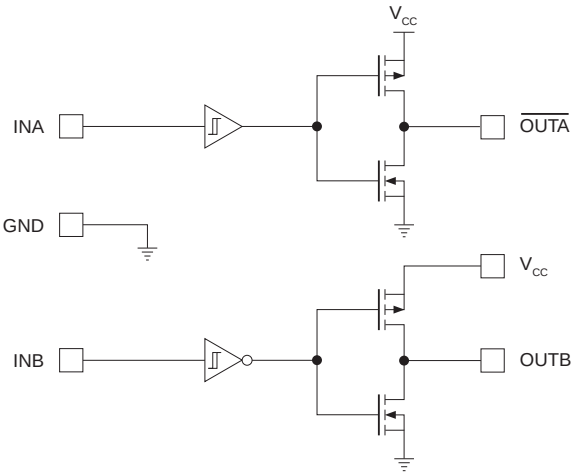

INA	$\overline{OUTA}$
0	1
1	0
INB	**OUTB**
0	0
1	1

3.3 IXDN602

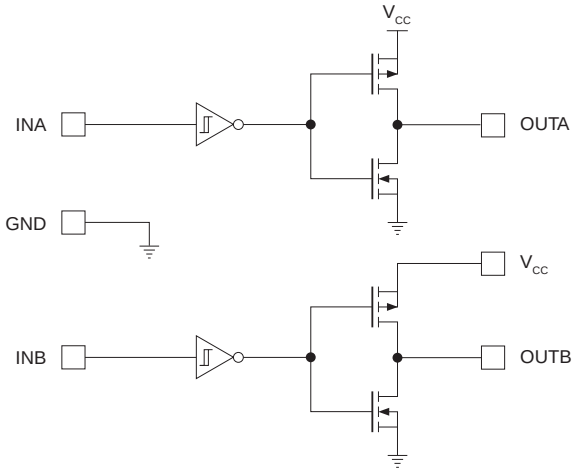

IN_X	OUT_X
0	0
1	1

Downloaded from Arrow.com.

4 Typical Performance Characteristics

Rise Time vs. Supply Voltage (V_{IN}=0-5V, f=10kHz, T_A=25ºC)

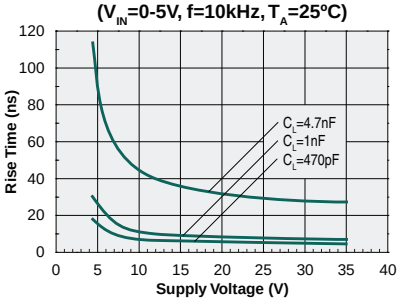

Fall Time vs. Supply Voltage (V_{IN}=0-5V, f=10kHz, T_A=25ºC)

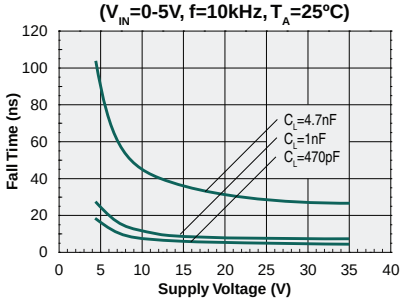

Rise & Fall Time vs. Temperature (V_{IN}=0-5V, V_{CC}=18V, C_L=1nF)

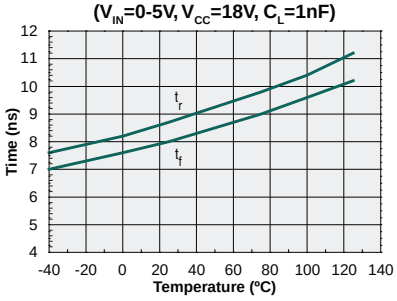

Rise Time vs. Load Capacitance

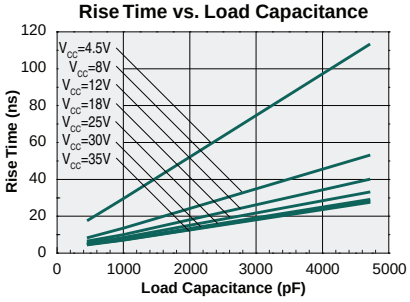

Fall Time vs. Load Capacitance

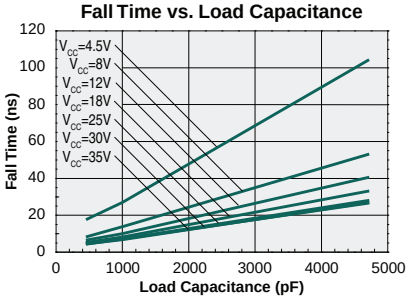

Propagation Delay vs. Supply Voltage (V_{IN}=0-5V, C_L=1nF, f=1kHz)

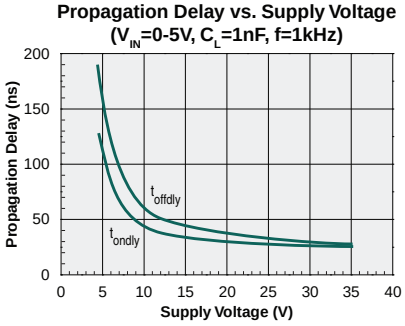

Propagation Delay vs. Input Voltage (V_{CC}=18V, C_L=1nF)

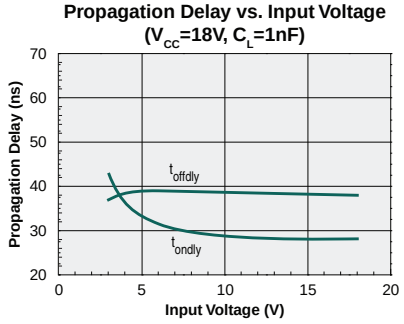

Propagation Delay vs. Temperature (V_{CC}=18V, C_L=1nF)

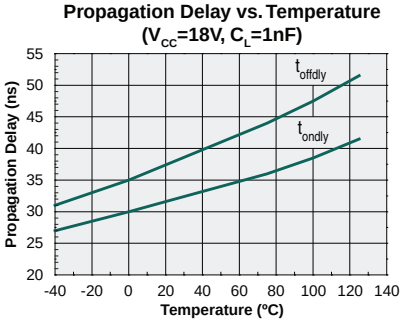

Input Threshold vs. Temperature (V_{CC}=18V, C_L=1nF)

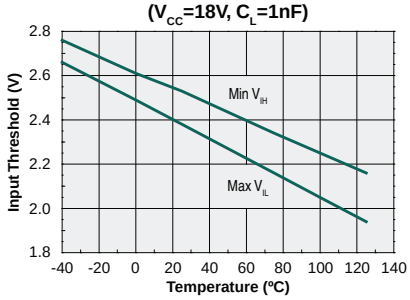

Input Threshold vs. Supply Voltage

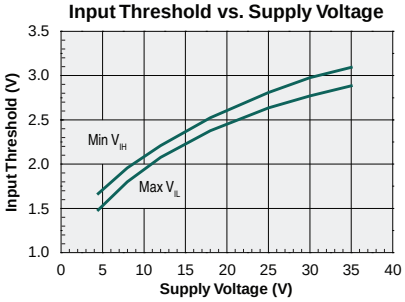

Downloaded from Arrow.com.

Supply Current vs. Load Capacitance Both Outputs Active (V_{CC}=8V)

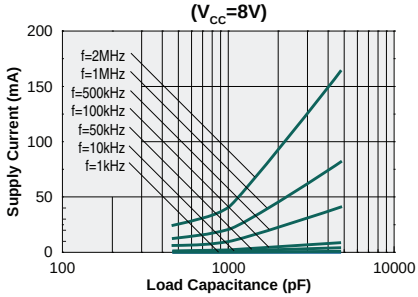

Supply Current vs. Load Capacitance Both Outputs Active (V_{CC}=12V)

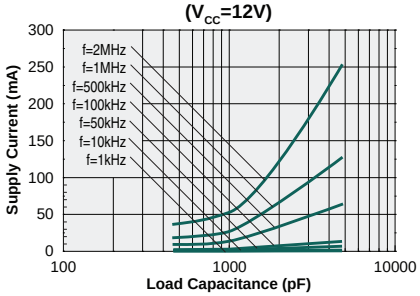

Supply Current vs. Load Capacitance Both Outputs Active (V_{CC}=18V)

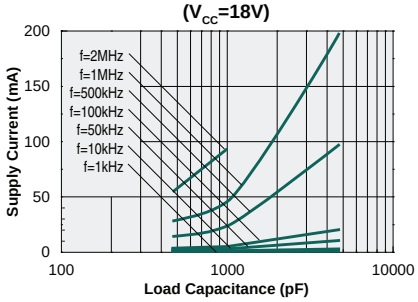

Supply Current vs. Load Capacitance Both Outputs Active (V_{CC}=35V)

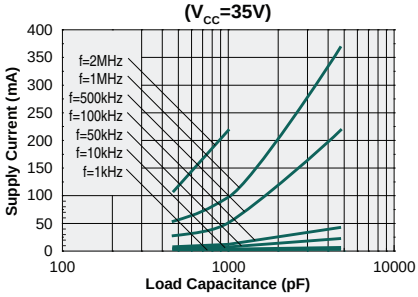

Supply Current vs. Frequency Both Outputs Active (V_{CC}=8V)

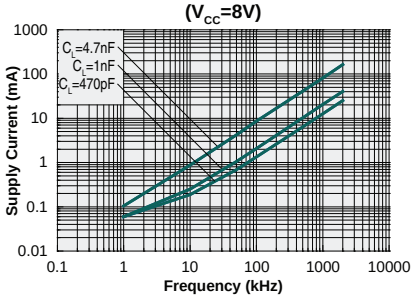

Supply Current vs. Frequency Both Outputs Active (V_{CC}=12V)

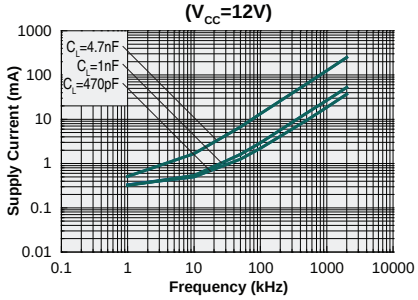

Supply Current vs. Frequency Both Outputs Active (V_{CC}=18V)

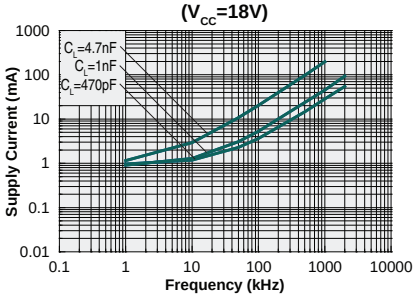

Supply Current vs. Frequency Both Outputs Active (V_{CC}=35V)

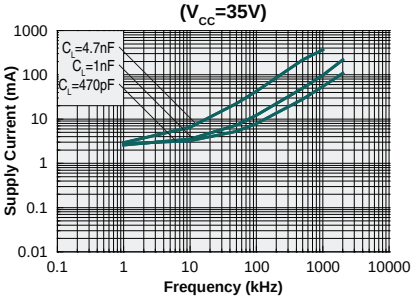

Quiescent Supply Current vs. Temperature (V_{CC}=18V)

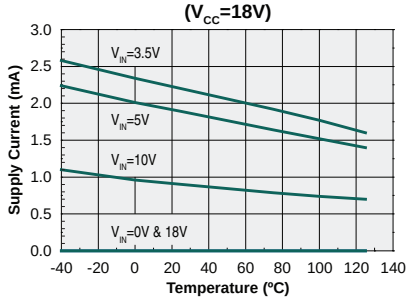

Dynamic Supply Current vs. Temperature (V_{IN}=0-5V, V_{CC}=18V, C_L=1nF, f=1kHz)

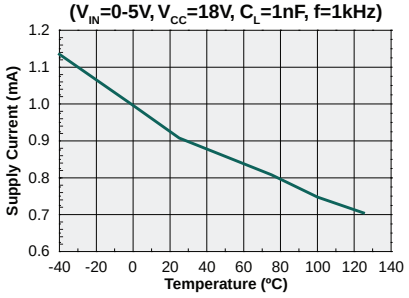

Output Source Current vs. Supply Voltage (C_L=27nF)

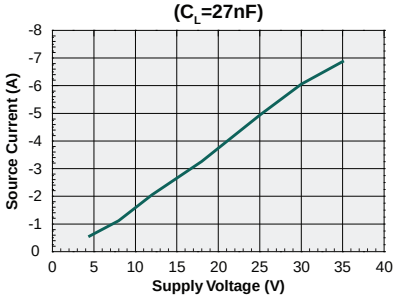

Output Sink Current vs. Supply Voltage (C_L=27nF)

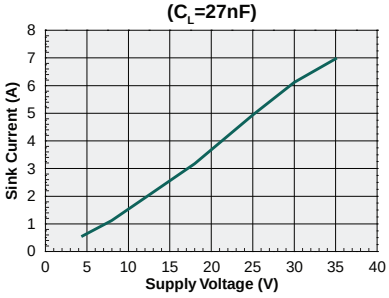

Downloaded from Arrow.com.

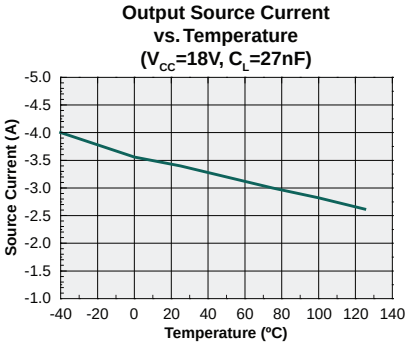

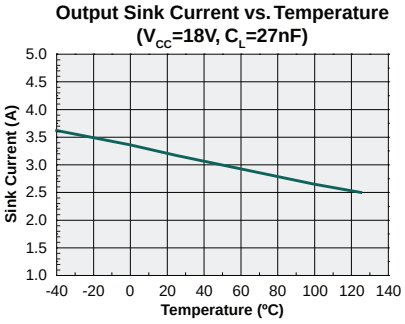

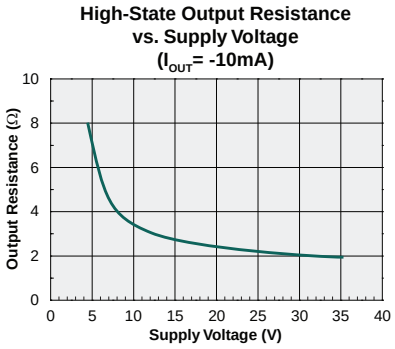

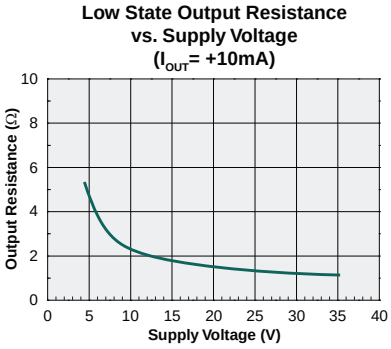

Downloaded from Arrow.com.

5 Manufacturing Information

5.1 Moisture Sensitivity

All plastic encapsulated semiconductor packages are susceptible to moisture ingression. IXYS Integrated Circuits Division classifies its plastic encapsulated devices for moisture sensitivity according to the latest version of the joint industry standard, **IPC/JEDEC J-STD-020**, in force at the time of product evaluation. We test all of our products to the maximum conditions set forth in the standard, and guarantee proper operation of our devices when handled according to the limitations and information in that standard as well as to any limitations set forth in the information or standards referenced below.

Failure to adhere to the warnings or limitations as established by the listed specifications could result in reduced product performance, reduction of operable life, and/or reduction of overall reliability.

This product carries a **Moisture Sensitivity Level (MSL)** classification as shown below, and should be handled according to the requirements of the latest version of the joint industry standard **IPC/JEDEC J-STD-033**.

Device	Moisture Sensitivity Level (MSL) Classification
IXD_602 All Versions	MSL 1

5.2 ESD Sensitivity

This product is **ESD Sensitive**, and should be handled according to the industry standard **JESD-625**.

5.3 Soldering Profile

Provided in the table below is the Classification Temperature (T_C) of this product and the maximum dwell time the body temperature of this device may be (T_C - 5)ºC or greater. The classification temperature sets the Maximum Body Temperature allowed for this device during lead-free reflow processes. For through-hole devices, and any other processes, the guidelines of J-STD-020 must be observed.

Device	Classification Temperature (T_C)	Dwell Time (t_p)	Max Reflow Cycles
IXD_602SI / IXD_602SIA / IXD_602D2	260°C	30 seconds	3
IXD_602PI	250°C	30 seconds	-

5.4 Board Wash

IXYS Integrated Circuits Division recommends the use of no-clean flux formulations. Board washing to reduce or remove flux residue following the solder reflow process is acceptable provided proper precautions are taken to prevent damage to the device. These precautions include but are not limited to: using a low pressure wash and providing a follow up bake cycle sufficient to remove any moisture trapped within the device due to the washing process. Due to the variability of the wash parameters used to clean the board, determination of the bake temperature and duration necessary to remove the moisture trapped within the package is the responsibility of the user (assembler). Cleaning or drying methods that employ ultrasonic energy may damage the device and should not be used. Additionally, the device must not be exposed to flux or solvents that are Chlorine- or Fluorine-based.

Downloaded from Arrow.com.

5.5 Mechanical Dimensions

5.5.1 SIA (8-Pin SOIC)

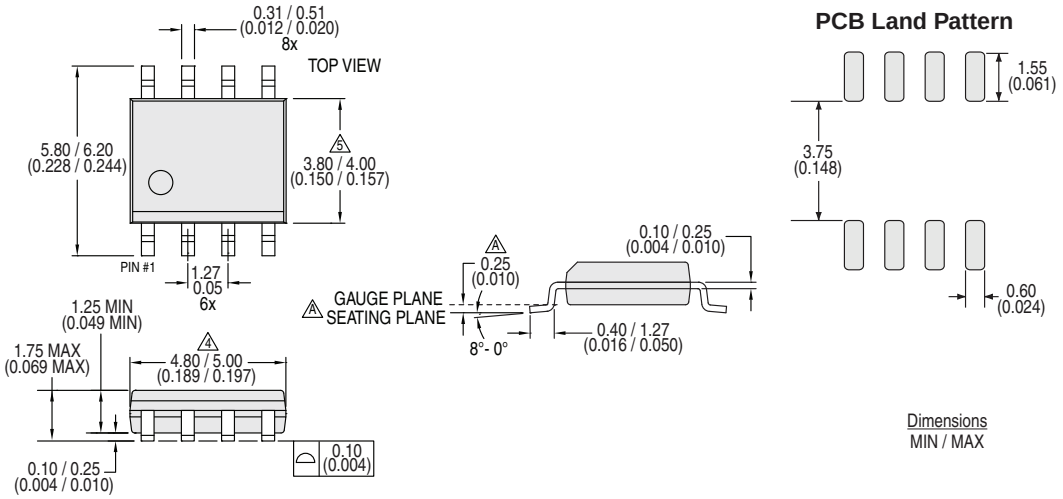

Notes:
1. Controlling dimension: millimeters.
2. All dimensions are in mm (inches).
3. This package conforms to JEDEC Standard MS-012, variation AA, Rev. F.
4. Dimension does not include mold flash, protrusions, or gate burrs. Mold flash, protrusions, or gate burrs shall not exceed 0.15mm per end.
5. Dimension does not include interlead flash or protrusion. Interlead flash or protrusion shall not exceed 0.25mm per side.
6. Lead thickness includes plating.

5.5.2 SI (8-Pin Power SOIC with Exposed Metal Back)

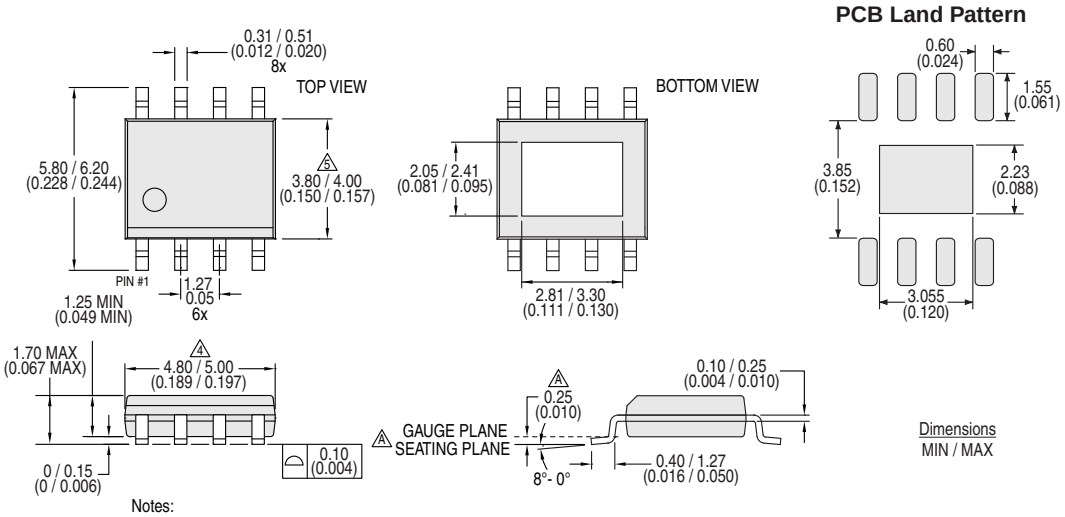

Notes:
1. Controlling dimension: millimeters.
2. All dimensions are in mm (inches).
3. This package conforms to JEDEC Standard MS-012, variation BA, Rev. F.
4. Dimension does not include mold flash, protrusions, or gate burrs. Mold flash, protrusions, or gate burrs shall not exceed 0.15mm per end.
5. Dimension does not include interlead flash or protrusion. Interlead flash or protrusion shall not exceed 0.25mm per side.
6. The exposed metal pad on the back of the package should be connected to GND. It is not suitable for carrying current.
7. Lead thickness includes plating.

Downloaded from Arrow.com.

5.5.3 Tape & Reel Information for SI and SIA Packages

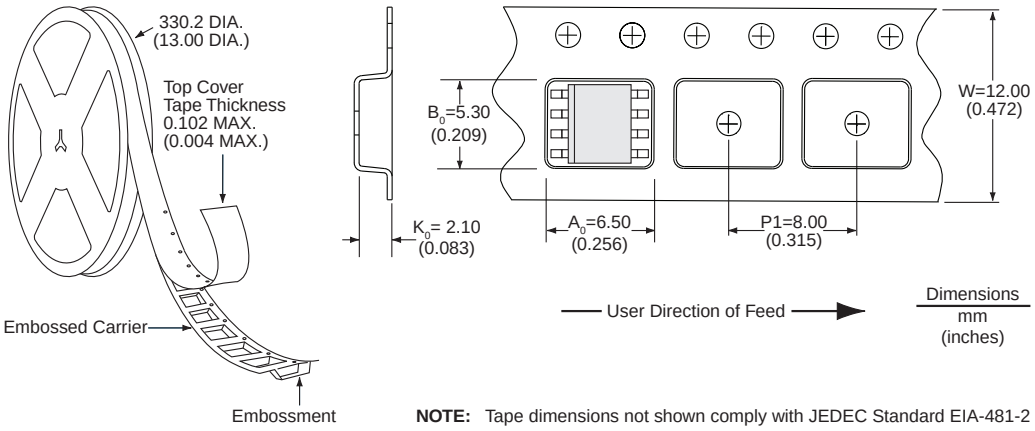

NOTE: Tape dimensions not shown comply with JEDEC Standard EIA-481-2

5.5.4 PI (8-Pin DIP)

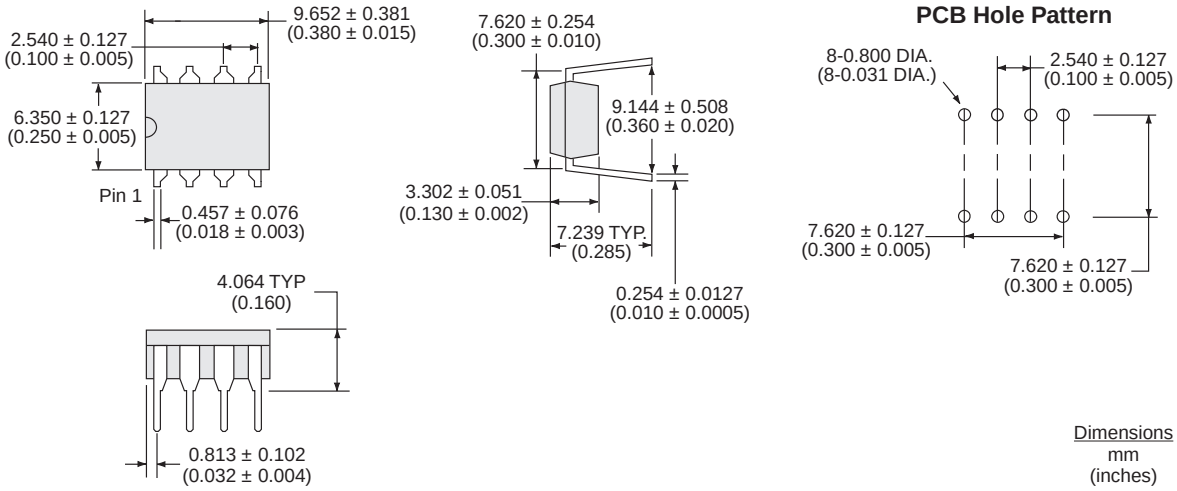

Downloaded from Arrow.com.

5.5.5 D2 (8-Pin DFN)

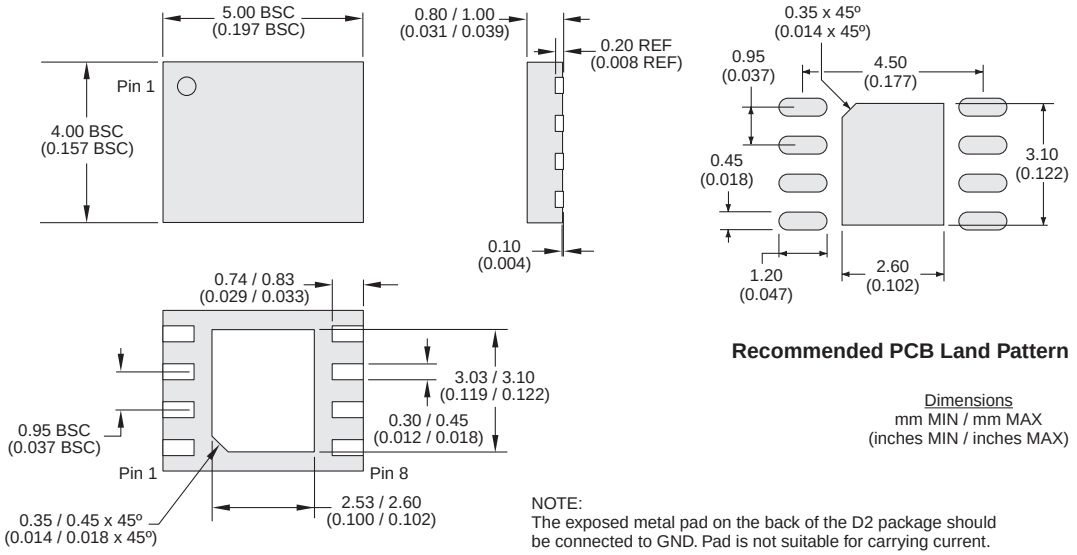

NOTE:
The exposed metal pad on the back of the D2 package should be connected to GND. Pad is not suitable for carrying current.

5.5.6 Tape & Reel Information for D2 Package

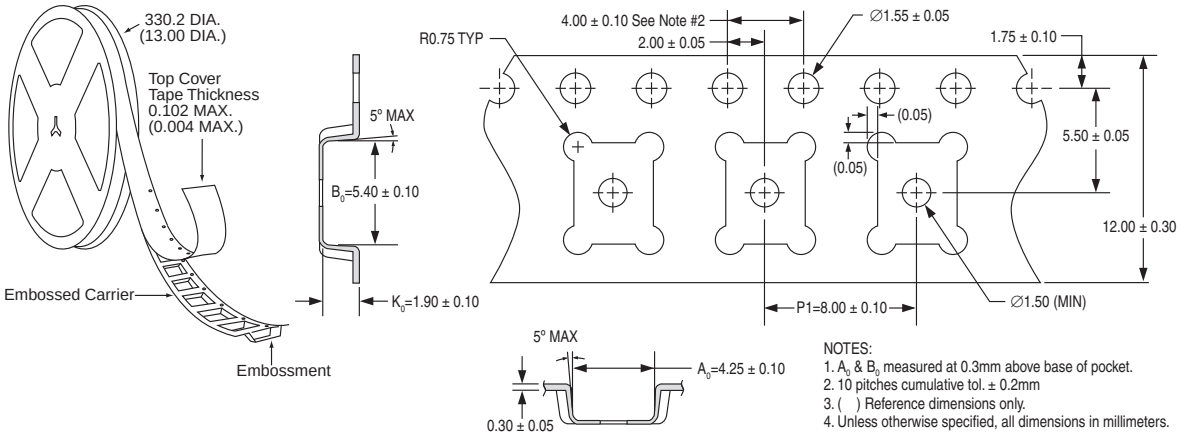

NOTES:
1. A_0 & B_0 measured at 0.3mm above base of pocket.
2. 10 pitches cumulative tol. ± 0.2mm
3. ( ) Reference dimensions only.
4. Unless otherwise specified, all dimensions in millimeters.

For additional information please visit our website at: www.ixysic.com

IXYS Integrated Circuits Division makes no representations or warranties with respect to the accuracy or completeness of the contents of this publication and reserves the right to make changes to specifications and product descriptions at any time without notice. Neither circuit patent licenses nor indemnity are expressed or implied. Except as set forth in IXYS Integrated Circuits Division's Standard Terms and Conditions of Sale, IXYS Integrated Circuits Division assumes no liability whatsoever, and disclaims any express or implied warranty, relating to its products including, but not limited to, the implied warranty of merchantability, fitness for a particular purpose, or infringement of any intellectual property right.

The products described in this document are not designed, intended, authorized or warranted for use as components in systems intended for surgical implant into the body, or in other applications intended to support or sustain life, or where malfunction of IXYS Integrated Circuits Division's product may result in direct physical harm, injury, or death to a person or severe property or environmental damage. IXYS Integrated Circuits Division reserves the right to discontinue or make changes to its products at any time without notice.

Specification: DS-IXD_602-R07
©Copyright 2017, IXYS Integrated Circuits Division
All rights reserved. Printed in USA.
10/25/2017

Downloaded from Arrow.com.