深圳扬兴科技有限公司
产　品　规　格　书
SPECIFICATION

产品名称	石英晶体谐振器　QUARTZ CRYSTAL UNITS
产品系列	HC-49SMD
料　　号	H6OSC-SUG-8.192M
参数描述	49SMD-8.192MHZ-20PF- -/+20PPM
页　　次	共6页

确 认 签 章

客　　户		
客户物料号		
机种/型号		
批　　准	审　　核	检　　验

扬 兴 签 核

制　　定	审　　核	批　　准
朱 灿 维		

深圳扬兴科技有限公司
Shenzhen YangXing Technology Co., Ltd.
地址：深圳市龙华区民治街道民塘路385号汇德大厦1号楼19层
ADDRESS: 19th Floor, 1st Huide Building, Mintang Rd No.385, Longhua District, Shenzhen
TEL：0755-28444777
WEB: http://www.yxc.hk

REV. 版本	Description of Revision History 修改内容	Date 日期	Engineer 工程师	Reviewer 审核
V.0	新版页面修改	2020/11/11	马占军	蔡荣洪
V.1	新版页面修改，变更工程师审核人员	2022/03/01	康明红	马占军
V.2	格式修正，印字修改	2023/06/20	钟 帅	黄月华

MHz Range Crystal Unit HC-49SMD

Product Name 系列型号 HC-49SMD 8.19200MHZ 20PF ±20PPM

Product Number / Ordering Code 产品料号 H6OSC-SUG-8.192M

1. Specifications (characteristics)（规格参数）

Parameter（电气参数）	Symbol	Min.（最小值）	Typ.（典型值）	Max.（最大值）	Unit（单位）
Oscillation mode（振动模式）	☑ Fundamental ☐ 3rd				
Cutting mode（切割方式）	☑ AT ☐ BT ☐ X +2°				
Nominal frequency（标称频率）	f_nom	-	8.192	-	MHz
Frequency tolerance at 25℃（常温频差）	f_tol	-20	-	20	x 10^{-6}
Stability over temperature（温度稳定性）	f_tem	-30	-	30	x 10^{-6}
Load capacitance（负载电容）	CL	-	20	-	pF
Motional resistance(ESR)（等效谐振电阻）	R1	-	-	60	Ω
Shunt capacitance（静态电容）	C0	-	-	7	pF
Motional capacitance（动态电容）	C1	-	-	-	fF
Level of drive（激励功率）	DL	-	100	-	μW
Operating temperature（工作温度）	T_use	-20	-	70	ºC
Storage temperature（储存温度）	T_stg	-40	-	85	ºC
Frequency aging （老化）	f_age	-3	-	3	x10^{-6} /year

2. External dimensions（外观尺寸）(Unit: mm)

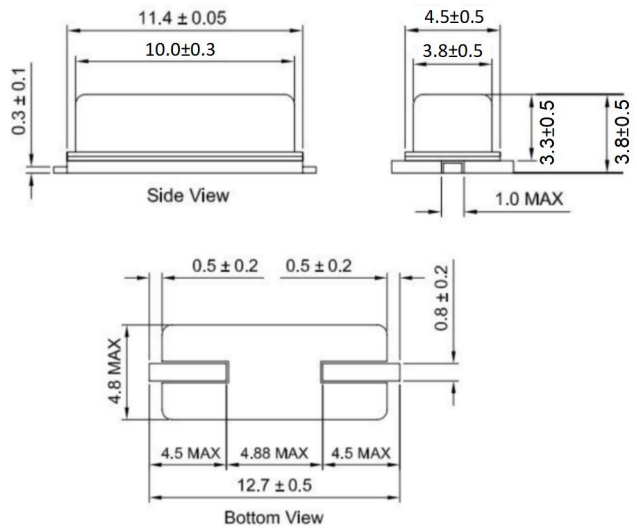

3. Recommended land pattern（推荐焊盘）(Unit: mm)

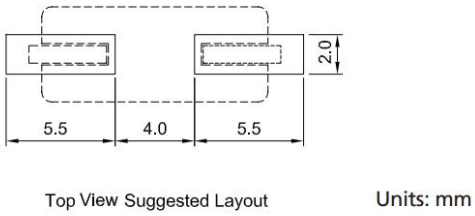

4. Marking information（丝印说明）

YXC ①
8.192 ②
3 29 S *
③ ④ ⑤ ⑥

① YXC LOGO
② Frequency
③ Year
④ Production cycle
⑤ Load capacitance
⑥ Line

5. Taping Specification（载带规格）(Unit: mm)

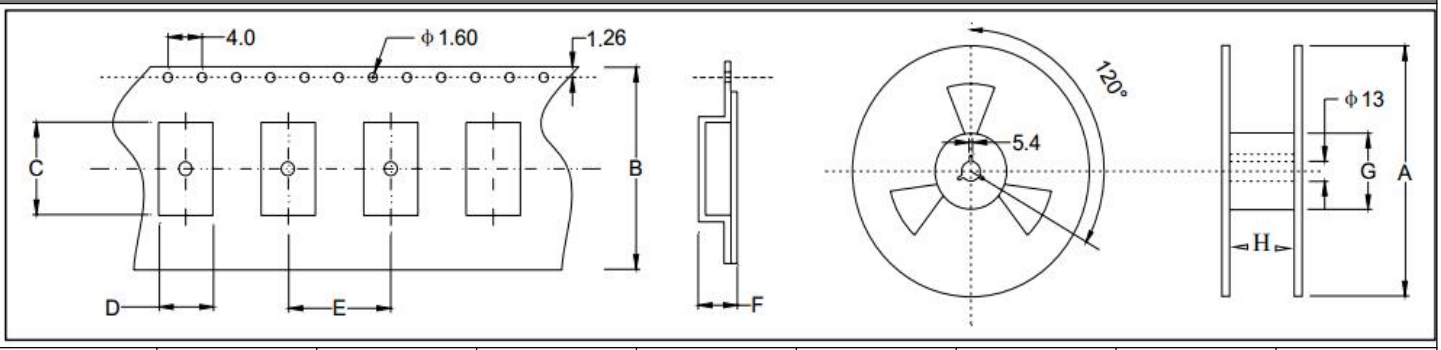

Size	A	B	C	D	E	F	G	H
49SMD	330±2.0	24.0±0.3	11.9±0.1	5.00±0.1	8.0±0.1	4.25±0.2	100.0±1.0	24.5±1.0
1000 pcs per reel								

6. Reliability characteristic（可靠性）

NO（序号）	Item（项目）	Condition（环境条件）	Reference (参考标准)	Specifications（说明）
6.1	Solderability（可焊性）	Solder bath temperature:260℃,dwell time:5 seconds,Solder: 100% tin	IEC68-2-20:1979	A new uniform coating of solder shall cover a minimum of 95% of the surface being immersed.
6.2	Resistance to soldering heat（焊接耐热性）	Solder temperature 260+/-5℃,Immersion time:10 S Solder bath composition:100% tin	IEC68-2-58:1989	ΔF≤+/-5ppm
6.3	Vibration（机械振动）	The entire frequency range: 10Hz to 55Hz ,Amplitude:1.5mm This motion shall be applied for a period of 2 h in each of 3 mutually perpendicular axes(a total of 6h)	IEC 68-2-21:1992	ΔF≤+/-5ppm
6.4	Drop test（跌落测试）	Drop from 75cm height on 3cm hard wooden board for 6 times	IEC68-2-32:1990	ΔF≤+/-5ppm
6.5	Cold storage（低温储存）	The quartz crystal unit shall be stored at a temperature of –40+/-3℃ for 1000 h.then it shall be subjected to standard atmospheric conditions for 1h after which measurement shall be made.	IEC68-2-6:1982	ΔF≤+/-5ppm
6.6	High temperature High humidity storage(steady state)（高温高湿度储存）	The quartz crystal unit shall be stored at a temperature of 40+/-2℃ with relative humidity of 95% for 1000h, then it shall be subjected to standard atmospheric conditions for 2h after which measurement shall be made.	IEC60068-2-1:1990	ΔF≤+/-5ppm

<table>
<tr><td>6.7</td><td>Thermal shock
（温度冲击测试）</td><td>The quartz crystal unit shall be subjected to 50 successive Change of temperature cycles. Each as shown in table below ,then it shall be subjected to standard atmospheric conditions for 1h after which measurement shall be made.
<table><tr><th>NO</th><th>Temperature</th><th>Duration</th></tr><tr><td>1</td><td>-40+/-3℃</td><td>15minutes</td></tr><tr><td>2</td><td>105+/-2℃</td><td>15minutes</td></tr><tr><td>3</td><td>Transition time</td><td>Within 10 seconds</td></tr></table></td><td>IEC68-2-14:1986</td><td>ΔF≤+/-5ppm</td></tr>
<tr><td>6.8</td><td>Sealing
（气密性）</td><td>Helium leakage detector shall used to measure the leakage rate of gas through any faulty seal. Pressure:500Kpa, duration:120 minutes.</td><td>IEC68-2-3:1984</td><td>Leakage rate≤ 1*10-9 Pa.m3/S</td></tr>
<tr><td>6.9</td><td>High temperature Life test
（高温储存测试）</td><td>The quartz crystal unit shall be stored at a temperature of 105+/-3℃ for 168h ,then it shall be subjected to standard atmospheric condition for 1h after which measurement shall be made.</td><td>IEC60068-2-2:1974</td><td>ΔF≤+/-5ppm</td></tr>
</table>

7. Reflow profile（回流焊）

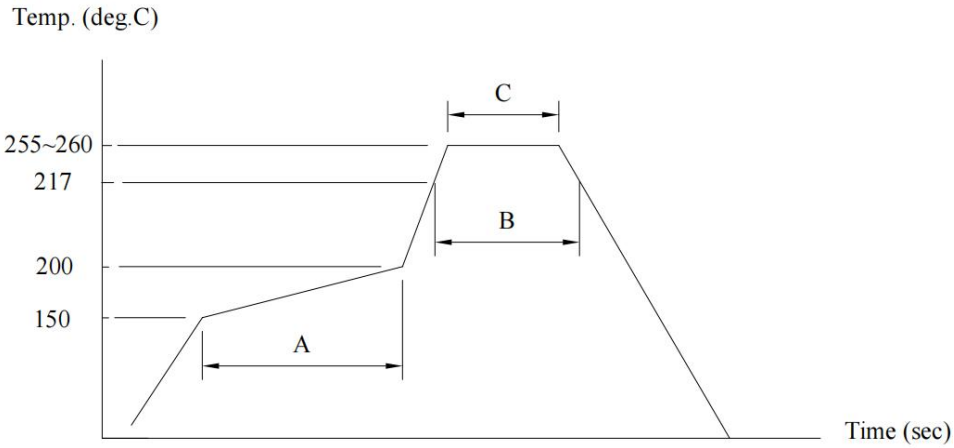

(A)→Preheating area : 150~200°C, 60~120sec.
(B)→Heating area : 217°C, 60~150sec.
(C)→Peak temperature : 255~260°C, 30sec. Max.
Ramp-up rate (217→260°C) : 3°C/sec. Max.
Ramp-down rate (260→217°C) : 6°C/sec. Max.
Time 25°C→260°C : 480sec. Max.
Moisture Sensitivity Level : Level1

8. Notice（注意）

包装 PACKING

包装方式应符合运输和装卸要求，特殊包装须经双方认可。

Packing must prevent damage during transportation and handing. Specific method will be settled by mutual Agreement.

对环境影响 INFLUENCE TO ENVIRONMENT

本产品在生产过程中不使用 ODS I，对臭氧层无破坏.

This product doesn't use the class I ODS at any of production process.

生产厂家 MANUFACTURER

公司名称：深圳扬兴科技有限公司

Shenzhen YangXing Technology Co., Ltd.

其它 OTHERS

1.如果您对本公司产品规格书有疑问或书中未列出，请与我方联系，协商解决及改进。

If you have some doubt or unknowing about this specification, Please contact us for settlement or development.

2.我们按照产品规格书要求保证晶体品质，若客户要求具体数据，我们可提供。

We guarantee that quartz crystal unit satisfies this specification, If you need the data, we will provide it.

3.如需应用于超声波环境下，请与我们联系。

For application in ultrasonic environment, please contact us.

4.变更与联络（MODIFY AND CONTACT）

本产品在设计、工艺、材料、生产厂所、关键设备、操作人员等影响产品质量的因素有变更时，应事先提供更改后的产品并经过质量认可后，方可大批量供货。

When the quality is changed due to the changes of the design, technology, material, manufacture place, main equipment and workers, we will first supply the modified products and obtain approval from you, then start to supply mass production.

5.售前售后服务（AFTER SALE SERVICE）

若在生产过程中遇到不良品，本公司负责调换，并及时提交不良品的分析及改进措施报告经认可。

If the defection product was found in the production process, we will exchange and provide the improving measures in time.

9. Contact us（联系我们）

www.yxc.hk