USB 2.0 COMPLIANT

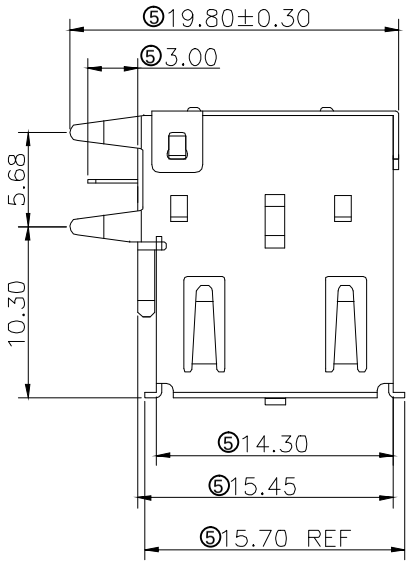

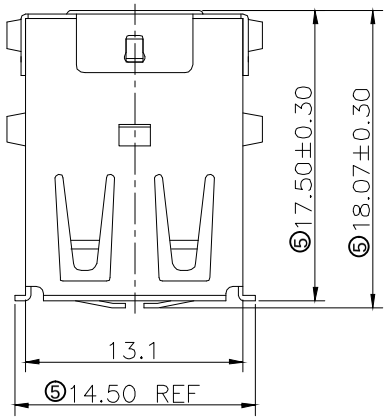

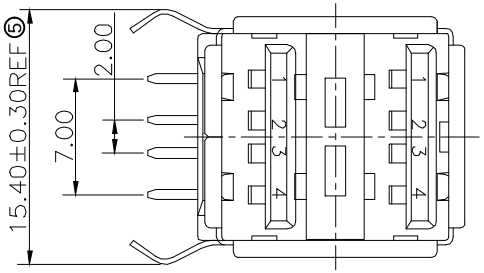

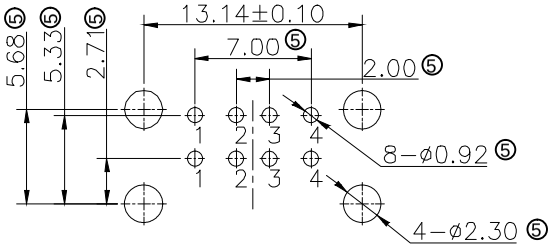

RECOMMENDED P.C.B LAYOUT

⑤ NOTES:
1. MATERIAL:
 1.1 Housing: PBT+30%GF UL94V-0, Color Black
 1.2 Contact : Brass
 1.3 Shell/Spring : Brass
 1.4 Back shell: SPCC
2. FINISH:
 2.1 Contact:
  ④Contact Area: A-USB A-2P-C Selective Gold flash
  A-USB A-2P-C/30 Selective 30u" Gold
  Solder Area: Tin Plated
  Under Plate: Ni Plated
 2.2 Shell: Ni Plated
3. MECHANICAL:
 3.1 Mating Force: 3.75 kgf MAX
 3.2 Unmating Force: 1.02 kgf MIN
 3.3 Durability: 1500 Cycles MIN
4. ELECTRICAL:
 4.1 Current Rating: 1.5A
 4.2 Dielectric Strength: 500V AC For 1 Minute
 4.3 Contact Resistance: 30mΩ MAX
 4.4 Insulation Resistance: 1000MΩ MIN
5. OPERATING TEMPERATURE: -55°C To +85°C.
PACKING: Tray

RoHS compliant
Unit: mm

Scale	Free
TOLERANCE	
.X	±0.30
.XX	±0.20
.XXX	±0.10
DIM	TOL
⑤ X.°	±5°
.X°	±3°
Angle	TOL

Id.	Modification	Date	Name		Date	Name
⑤	Update	24.05.2018	Segal	Drawn	30.05.2007	Hellwig
④	Add 30u" gold versioin	03.07.2014	Amy	Approved	24.05.2018	Winnie
③	Modify Insulator color to Black	07.07.2009	Dean			
②	Re-draw	06.08.2008	Hellwig			
①	Drawn	30.05.2007	Hellwig			

ASSMANN wsw components

Customer-No.

ASSMANN WSW-No. A-USB A-2P-C
④ A-USB A-2P-C/30

Drawing-No. ASS 1360A CO rev05

Replace SHEET

Downloaded from Arrow.com.