1200V High Voltage High and Low Side Driver

BM60212FV-C

General Description

The BM60212FV-C is high and low side drive IC which operates up to 1200V with bootstrap operation, which can drive N-channel power MOSFET and IGBT.
Under-voltage Lockout (UVLO) function and Miller Clamp function are built-in.

Key Specifications

- High-Side Floating Supply Voltage: 1200V
- Maximum Gate Drive Voltage: 24V
- Turn ON/OFF Time: 75ns (Max)
- Logic Input Minimum Pulse Width: 60ns

Features

- AEC-Q100 Qualified(Note 1)
- High-Side Floating Supply Voltage 1200V
- Active Miller Clamping
- Under Voltage Lockout Function
- 3.3V and 5.0V Input Logic Compatible

(Note 1) Grade 1

Package

	W(Typ) x D(Typ) x H(Max)
SSOP-B20W	6.50mm x 8.10mm x 2.01mm

SSOP-B20W

Applications

- MOSFET Gate Driver
- IGBT Gate Driver

Typical Application Circuit

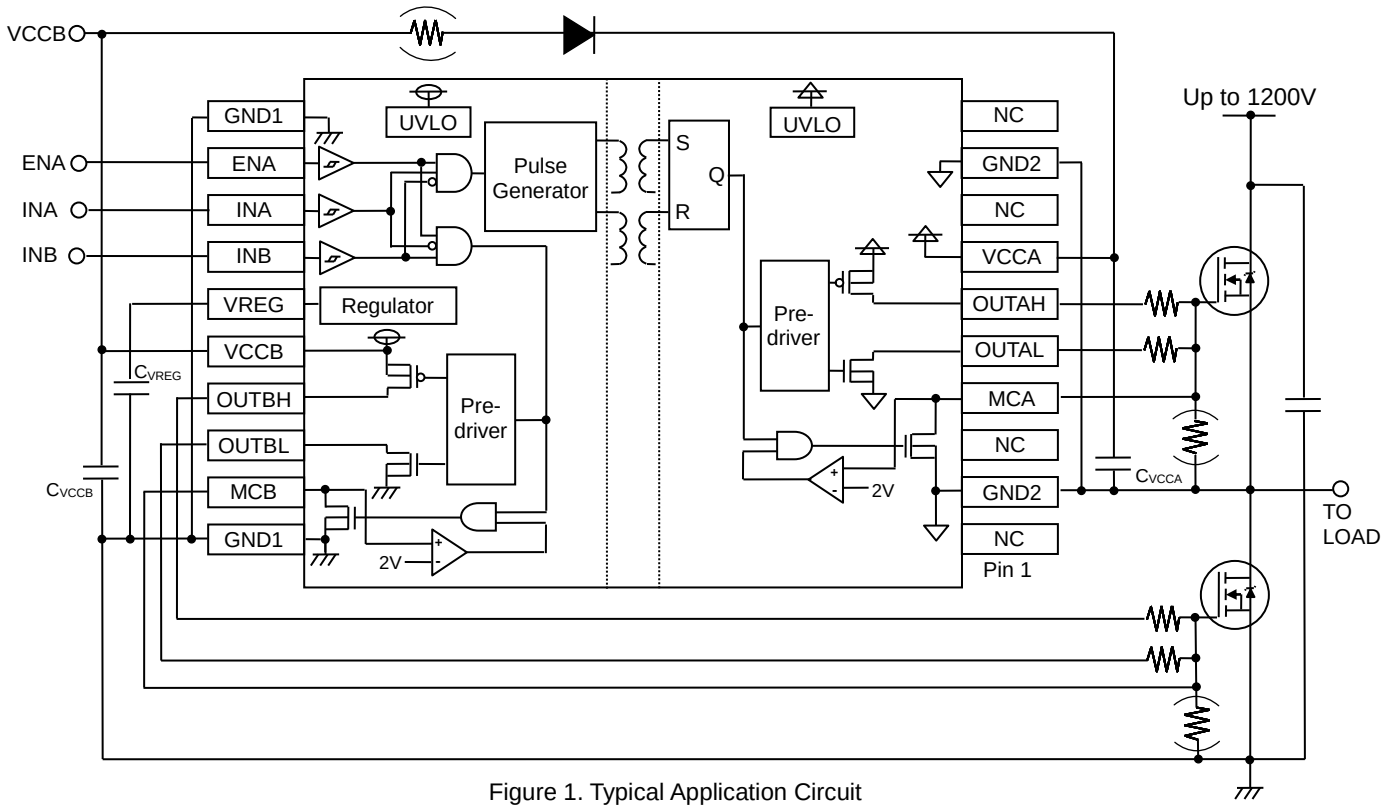

Figure 1. Typical Application Circuit

○Product structure : Semiconductor integrated circuit ○This product has no designed protection against radioactive rays

© 2018 ROHM Co., Ltd. All rights reserved.

Downloaded from Arrow.com.

Contents

General Description 1
Features 1
Applications 1
Key Specifications 1
Package 1
Typical Application Circuit 1
Recommended Range of External Constants 3
Pin Configuration 3
Pin Descriptions 3
Description of Functions and Examples of Constant Setting 5
Absolute Maximum Ratings (Ta=25°C) 8
Thermal Resistance 9
Recommended Operating Conditions 9
Electrical Characteristics 10
Typical Performance Curves 11
Figure 10. VCCB Circuit Current 1 vs Low-side Supply Voltage (OUTB=L) 11
Figure 11. VCCB Circuit Current 2 vs Low-side Supply Voltage (OUTB=H) 11
Figure 12. VCCB Circuit Current 3 vs Low-side Supply Voltage（INA=10kHz, Duty=50%） 11
Figure 13. VCCB Circuit Current 4 vs Low-side Supply Voltage (INA=20kHz, Duty=50%) 11
Figure 14. VCCA Circuit Current 1 vs High-side Floating Supply Voltage (OUTA=L) 12
Figure 15. VCCA Circuit Current 2 vs High-side Floating Supply Voltage (OUTA=H) 12
Figure 16. Logic H/L Level Input Voltage vs High-side Floating Supply Voltage 12
Figure 17. OUTA (OUTB)Output Voltage vs Logic Input Voltage (V_{CCB}=15V, V_{CCA}=15V, Ta=+25°C) 12
Figure 18. Logic Pull-down Resistance vs Temperature 13
Figure 19. Logic Pull-down Current vs Temperature 13
Figure 20. Logic Input Minimum Pulse Width vs Temperature 13
Figure 21. ENA Input Mask Time vs Temperature 13
Figure 22. OUTA ON Resistance (Source) vs Temperature 14
Figure 23. OUTA ON Resistance (Sink) vs Temperature 14
Figure 24. OUTB ON Resistance (Source) vs Temperature 14
Figure 25. OUTB ON Resistance (Sink) vs Temperature 14
Figure 26. OUTA Turn ON Time vs Temperature (INA=PWM, INB=L) 15
Figure 27. OUTA Turn OFF Time vs Temperature (INA=PWM, INB=L) 15
Figure 28. OUTB Turn ON Time vs Temperature (INA=L, INB=PWM) 15
Figure 29. OUTB Turn OFF Time vs Temperature (INA=L, INB=PWM) 15
Figure 30. MCA ON Resistance vs Temperature 16
Figure 31. MCB ON Resistance vs Temperature 16
Figure 32. MCA ON Threshold Voltage vs Temperature 16
Figure 33. MCB ON Threshold Voltage vs Temperature 16
Figure 34. VCCB UVLO ON/OFF Voltage vs Temperature 17
Figure 35. VCCB UVLO Mask Time vs Temperature 17
Figure 36. VCCA UVLO ON/OFF Voltage vs Temperature 17
Figure 37. VCCA UVLO Mask Time vs Temperature 17
I/O Equivalence Circuits 18
Operational Notes 19
Ordering Information 21
Marking Diagram 21
Physical Dimension, Tape and Reel Information 22
Revision History 23

© 2018 ROHM Co., Ltd. All rights reserved.

Downloaded from Arrow.com.

Recommended Range of External Constants

Pin Name	Symbol	Recommended Value			Unit
		Min	Typ	Max	
VCCA	C_{VCCA}	0.1	1.0	-	µF
VCCB	C_{VCCB}	0.1	1.0	-	µF
VREG	C_{VREG}	0.1	3.3	10.0	µF

Pin Configuration

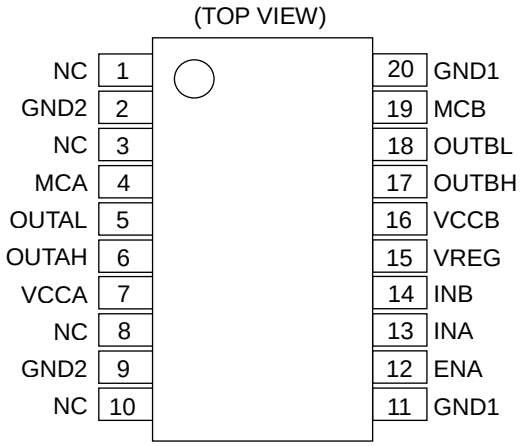

Figure 2. Pin Configuration

Pin Descriptions

Pin No.	Pin Name	Function
1	NC	Non-connection
2	GND2	High-side ground pin
3	NC	Non-connection
4	MCA	High-side pin for Miller Clamp
5	OUTAL	High-side output pin (Sink)
6	OUTAH	High-side output pin (Source)
7	VCCA	High-side power supply pin
8	NC	Non-connection
9	GND2	High-side ground pin
10	NC	Non-connection
11	GND1	Low-side and input-side ground pin
12	ENA	Input enabling signal input pin
13	INA	Control input pin for high-side
14	INB	Control input pin for low-side
15	VREG	Power supply pin for input circuit
16	VCCB	Low-side and input-side power supply pin
17	OUTBH	Low-side output pin (Source)
18	OUTBL	Low-side output pin (Sink)
19	MCB	Low-side pin for Miller Clamp
20	GND1	Low-side and input-side ground pin

© 2018 ROHM Co., Ltd. All rights reserved.

Downloaded from Arrow.com.

Pin Descriptions - continued

1. VCCA (High-side power supply pin)
   The VCCA pin is a power supply pin on the high-side output. To reduce voltage fluctuations due to the OUTA pin output current, connect a bypass capacitor between the VCCA and GND2 pins.

2. GND2 (High-side ground pin)
   The GND2 pin is a ground pin on the high-side. Connect the GND2 pin to the emitter/source of a high-side power device.

3. VCCB (Low-side and input-side power supply pin)
   The VCCB pin is a power supply pin on the low-side output. To reduce voltage fluctuations due to the OUTB pin output current, connect a bypass capacitor between the VCCB and GND2 pins.

4. GND1 (Low-side and input-side ground pin)
   The GND1 pin is a ground pin on the low-side and the input side.

5. VREG (Power supply pin for input circuit)
   The VREG pin is a power supply pin for the input circuit. To suppress voltage fluctuations due to the current to drive internal transformers, connect a bypass capacitor between the VREG and GND1 pins.

6. INA, INB, ENA (Control input pin)
   The INA, INB and ENA pins are used to determine output logic.

ENA	INA	INB	OUTA	OUTB
L	X	X	L	L
H	L	L	L	L
H	L	H	L	H
H	H	L	H	L
H	H	H	L	L

X: Don't care

   The High output of OUTA (OUTB) becomes effective in ENA=H and L to H edge input of INA (INB).

7. OUTAH, OUTAL, OUTBH, OUTBL (Output pin)
   The OUTAH pin and the OUTBH pin are source side pins used to drive the gate of a power device, and the OUTAL pin and the OUTBL pin are sink side pins used to drive the gate of a power device.

8. MCA, MCB (Pin for Miller Clamp)
   The MCA pin and MCB pin are for preventing the increase in gate voltage due to the Miller current of the power device connected to the OUT pin. If the Miller Clamp function is not used, short-circuit the MCA pin to the GND2 pin and the MCB pin to the GND1 pin.

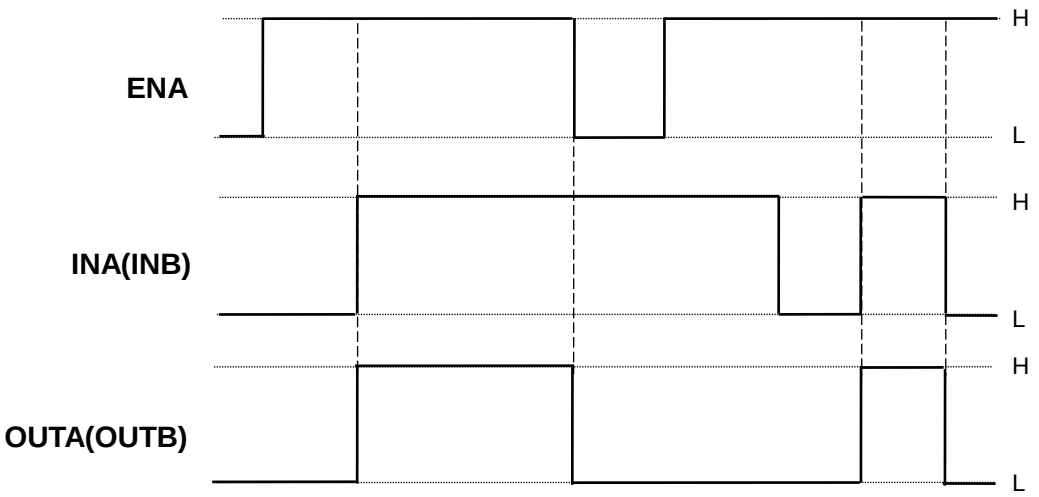

Figure 3. Input and Output Logic Timing Chart

© 2018 ROHM Co., Ltd. All rights reserved.

Downloaded from Arrow.com.

Description of Functions and Examples of Constant Setting

1. Miller Clamp function
   When INA (INB)=Low and MCA (MCB) pin voltage < V_{MCON} (Typ 2.0V), the internal MOSFET of the MCA (MCB) pin is turned ON. It is maintained until the input signal is switched to High.

INA (INB)	MCA (MCB)	Internal MOSFET of the MCA (MCB) pin
L	Less than V_{MCON}	ON
H	X	OFF

X: Don't care

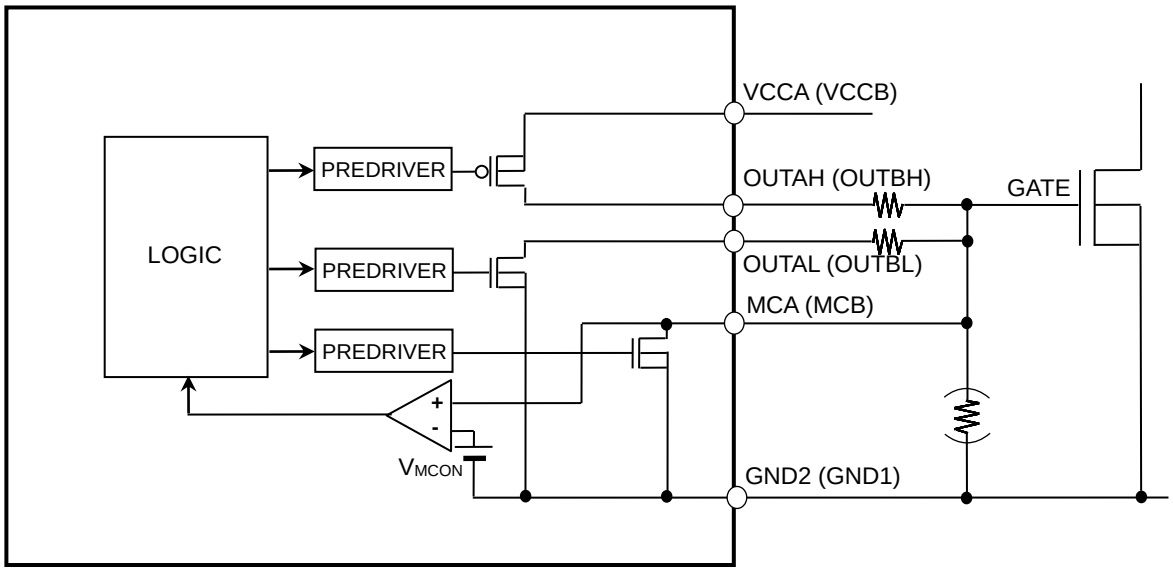

Figure 4. Block Diagram of Miller Clamp Function

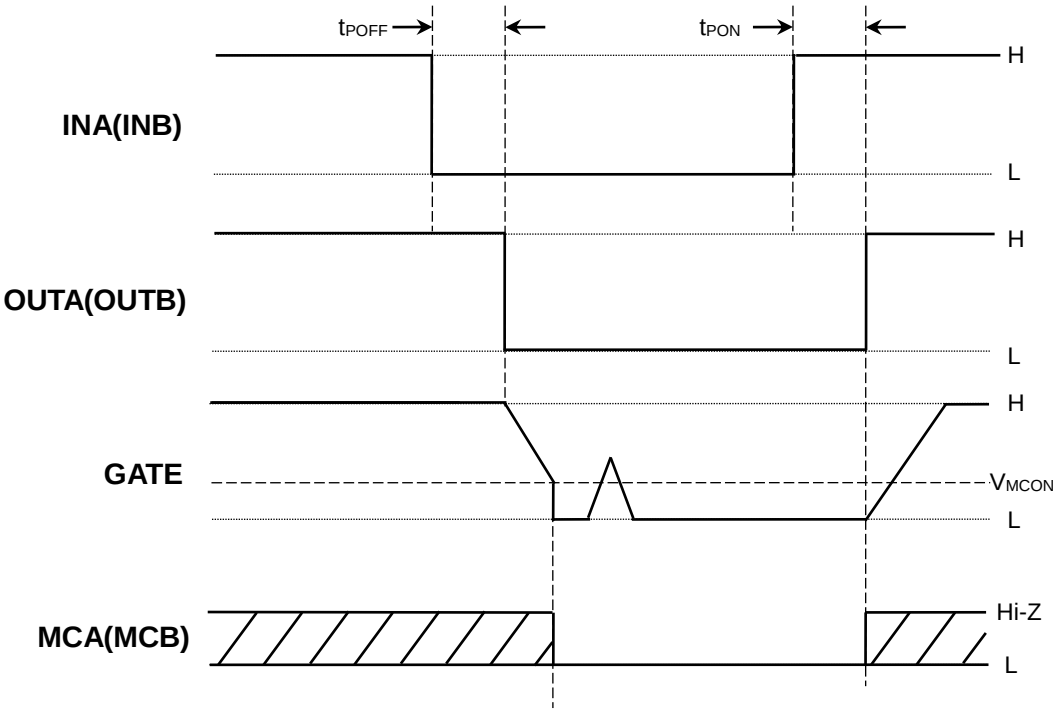

Figure 5. Timing Chart of Miller Clamp Function

© 2018 ROHM Co., Ltd. All rights reserved.

Downloaded from Arrow.com.

Description of Functions and Examples of Constant Setting - continued

2. Under-voltage Lockout (UVLO) function
   The BM60212FV-C incorporates the Under-voltage Lockout (UVLO) function both the high and low voltage sides. When the power supply voltage drops to V_{UVLOL} (Typ 8.5V), the OUT pin will output the "L" signal. When the power supply voltage rises to V_{UVLOH} (Typ 9.5V), the OUT pin will return to a normal state. In addition, to prevent malfunctions due to noises, a mask time of $t_{UVLOMSK}$ (Typ 2.5µs) is set on both the high and the low voltage sides.

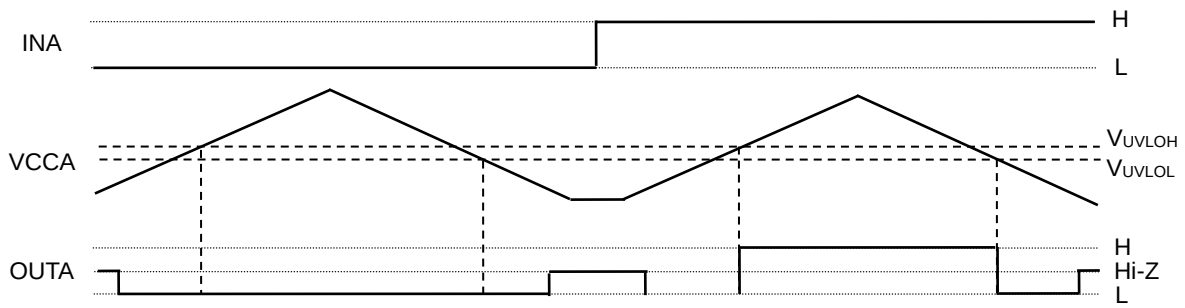

Figure 6. High-side UVLO Function Operation Timing Chart

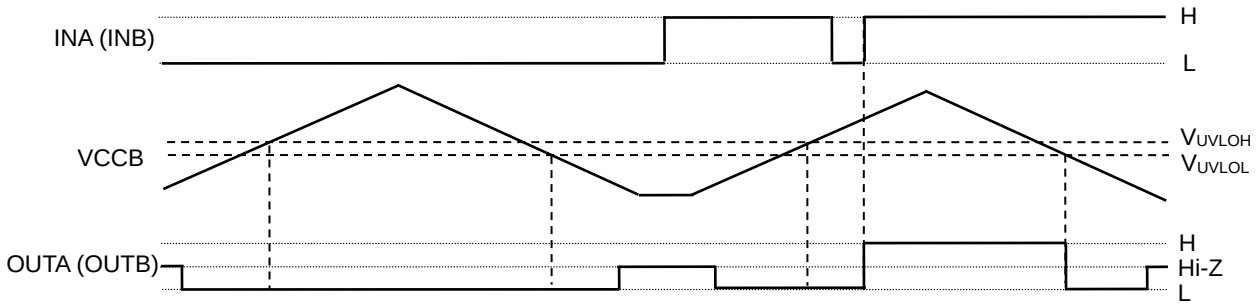

Figure 7. Low-side UVLO Function Operation Timing Chart

3. I/O condition table

No	Status	Input					Output			
		VCCB	VCCA	ENA	INB	INA	OUTB	MCB	OUTA	MCA
1	VCCB UVLO	UVLO	X	X	X	X	L	L	L	L
2	VCCA UVLO	○	UVLO	L	X	X	L	L	L	L
3		○	UVLO	H	L	X	L	L	L	L
4		○	UVLO	H	H	L	H	Hi-Z	L	L
5		○	UVLO	H	H	H	L	L	L	L
6	Disable	○	○	L	X	X	L	L	L	L
7	Normal Operation	○	○	H	L	L	L	L	L	L
8		○	○	H	L	H	L	L	H	Hi-Z
9		○	○	H	H	L	H	Hi-Z	L	L
10		○	○	H	H	H	L	L	L	L

○ : VCCA or VCCB > UVLO, X : Don't care

© 2018 ROHM Co., Ltd. All rights reserved.

Downloaded from Arrow.com.

Description of Functions and Examples of Constant Setting - continued

4. Power supply startup/shutdown sequence

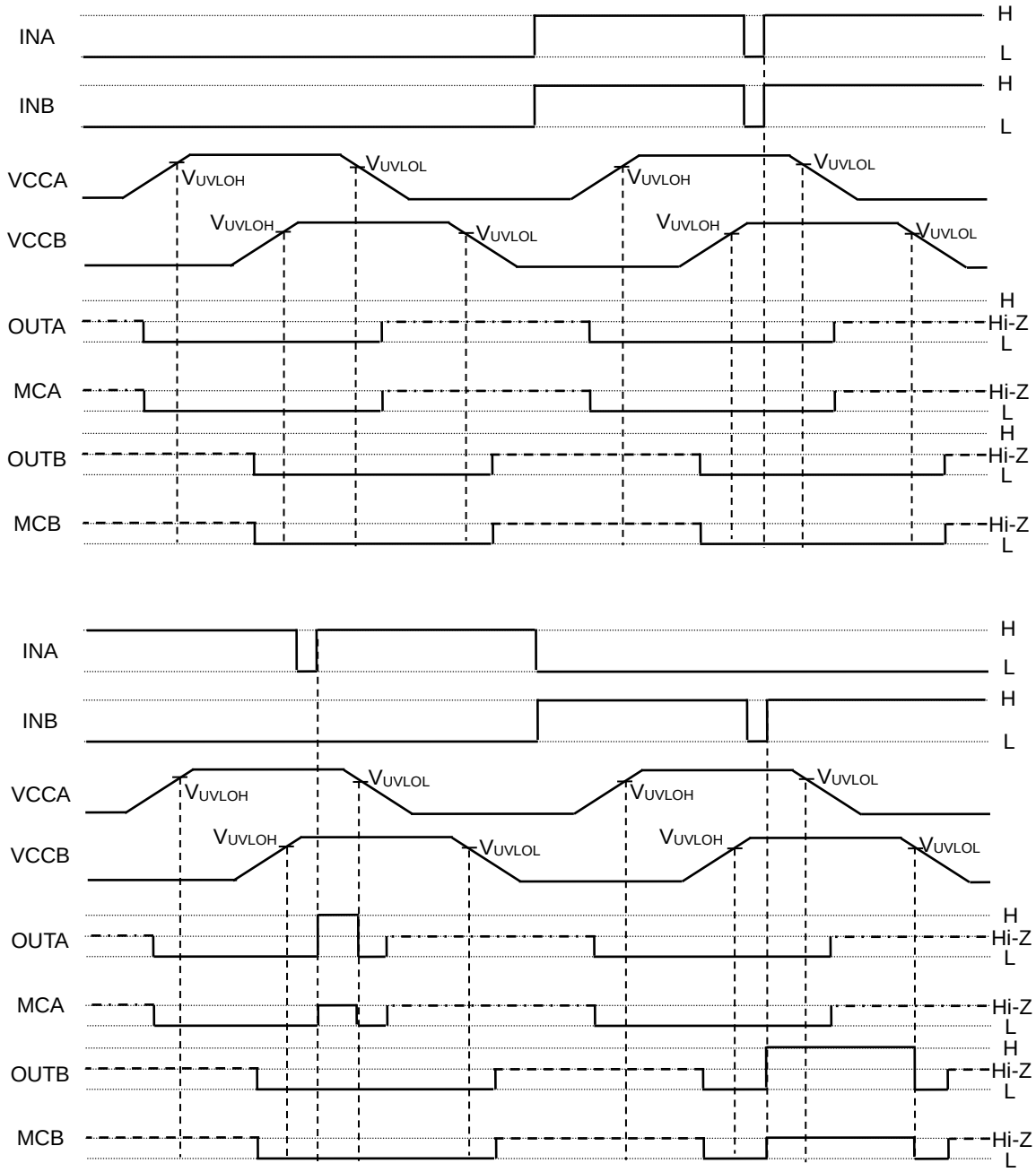

- - · - · - : Since the VCCA to GND2 pin voltage is low and the output MOS does not turn ON, the output pins become Hi-Z.

- - - - - - : Since the VCCB to GND1 pin voltage is low and the output MOS does not turn ON, the output pins become Hi-Z.

Figure 8. Power Supply Startup/Shutdown Sequence

© 2018 ROHM Co., Ltd. All rights reserved.

Downloaded from Arrow.com.

Absolute Maximum Ratings (Ta=25°C)

Parameter	Symbol	Limits	Unit
High-side Floating Supply Voltage	V_{CCA}	-0.3 to +1230 *(Note 2)*	V
High-side Floating Supply Offset Voltage	GND2	V_{CCA}-30 to V_{CCA}+0.3	V
High-side Floating Output Voltage OUTA	V_{OUTA}	GND2-0.3 to V_{CCA}+0.3	V
High-side Miller Clamp Pin Voltage MCA	V_{MCA}	GND2-0.3 to V_{CCA}+0.3	V
Low-side Supply Voltage	V_{CCB}	-0.3 to +30.0 *(Note 2)*	V
Low-side Output Voltage OUTB	V_{OUTB}	-0.3 to +V_{CCB}+0.3 or +30.0 *(Note 2)*	V
Low-side Miller Clamp Pin Voltage MCB	V_{MCB}	-0.3 to +V_{CCB}+0.3 or +30.0 *(Note 2)*	V
Logic Input Voltage (INA, INB, ENA)	V_{IN}	-0.3 to +V_{CCB}+0.3 or +30.0 *(Note 2)*	V
OUTA Pin Output Current (Peak 1µs)	$I_{OUTAPEAK}$	5.0 *(Note 3)*	A
OUTB Pin Output Current (Peak 1µs)	$I_{OUTBPEAK}$	5.0 *(Note 3)*	A
MCA Pin Output Current (Peak 1µs)	$I_{MCAPEAK}$	5.0 *(Note 3)*	A
MCB Pin Output Current (Peak 1µs)	$I_{MCBPEAK}$	5.0 *(Note 3)*	A
Storage Temperature Range	Tstg	-55 to +150	°C
Maximum Junction Temperature	Tjmax	150	°C

Caution 1: *Operating the IC over the absolute maximum ratings may damage the IC. The damage can either be a short circuit between pins or an open circuit between pins and the internal circuitry. Therefore, it is important to consider circuit protection measures, such as adding a fuse, in case the IC is operated over the absolute maximum ratings.*

Caution 2: *Should by any chance the maximum junction temperature rating be exceeded the rise in temperature of the chip may result in deterioration of the properties of the chip. In case of exceeding this absolute maximum rating, design a PCB boards with thermal resistance taken into consideration by increasing board size and copper area so as not to exceed the maximum junction temperature rating.*

(Note 2) Relative to GND1.

(Note 3) Should not exceed Tj=150°C.

© 2018 ROHM Co., Ltd. All rights reserved.

Downloaded from Arrow.com.

Thermal Resistance(Note 4)

Parameter	Symbol	Thermal Resistance (Typ)		Unit
		1s(Note 6)	2s2p(Note 7)	
SSOP-B20W				
Junction to Ambient	θ_{JA}	151.5	80.6	°C/W
Junction to Top Characterization Parameter (Note5)	Ψ_{JT}	47	40	°C/W

(Note 4) Based on JESD51-2A(Still-Air)
(Note 5) The thermal characterization parameter to report the difference between junction temperature and the temperature at the top center of the outside surface of the component package.
(Note 6) Using a PCB board based on JESD51-3.
(Note 7) Using a PCB board based on JESD51-7.

Layer Number of Measurement Board	Material	Board Size
Single	FR-4	114.3mm x 76.2mm x 1.57mmt

Top	
Copper Pattern	Thickness
Footprints and Traces	70µm

Layer Number of Measurement Board	Material	Board Size
4 Layers	FR-4	114.3mm x 76.2mm x 1.6mmt

Top		2 Internal Layers		Bottom	
Copper Pattern	Thickness	Copper Pattern	Thickness	Copper Pattern	Thickness
Footprints and Traces	70µm	74.2mm x 74.2mm	35µm	74.2mm x 74.2mm	70µm

Recommended Operating Conditions

Parameter	Symbol	Min	Typ	Max	Units
High-side Floating Supply Voltage	V_{CCA}	GND2+10	GND2+15	GND2+24	V
High-side Floating Supply Offset Voltage	GND2	-	-	1200	V
High-side Floating Output Voltage OUTA	V_{OUTA}	GND2	-	V_{CCA}	V
Low-side Output Voltage OUTB	V_{OUTB}	GND1	-	V_{CCB}	V
Logic Input Voltage (INA, INB, ENA)	V_{IN}	GND1	-	V_{CCB}	V
Low-side Supply Voltage	V_{CCB}	10	15	24	V
Operating Temperature Range	T_{opr}	-40	+25	+125	°C

© 2018 ROHM Co., Ltd. All rights reserved.

Downloaded from Arrow.com.

Electrical Characteristics

(Unless otherwise specified Ta=-40°C to +125°C, V_{CCA}-GND2=10V to 24V, V_{CCB}=10V to 24V)

Parameter	Symbol	Limit			Unit	Conditions
		Min	Typ	Max		
General						
VCCB Circuit Current 1	I_{CC11}	0.54	0.85	1.35	mA	OUTB=L
VCCB Circuit Current 2	I_{CC12}	0.49	0.80	1.30	mA	OUTB=H
VCCB Circuit Current 3	I_{CC12}	1.28	1.89	3.30	mA	INA=10kHz, Duty=50%
VCCB Circuit Current 4	I_{CC13}	1.29	1.92	3.40	mA	INA=20kHz, Duty=50%
VCCA Circuit Current 1	I_{CC21}	0.49	0.73	1.15	mA	OUTA=L
VCCA Circuit Current 2	I_{CC22}	0.38	0.57	0.95	mA	OUTA=H
Logic Block						
Logic High Level Input Voltage	V_{INH}	2.0	-	V_{CCB}	V	INA, INB, ENA
Logic Low Level Input Voltage	V_{INL}	0	-	0.8	V	INA, INB, ENA
Logic Pull-down Resistance	R_{IND}	25	50	100	kΩ	INA<3V, INB<3V, ENA<3V
Logic Pull-down Current	I_{IND}	20	50	150	µA	INA≥3V, INB≥3V, ENA≥3V
Logic Input Minimum Pulse Width	t_{INMIN}	-	-	60	ns	INA, INB
ENA Input Mask Time	t_{ENAMSK}	0.6	1.0	1.4	µs	ENA
Output						
OUT ON Resistance (Source)	R_{ONH}	0.4	0.9	2.0	Ω	I_{OUT}=-40mA, OUTA, OUTB
OUT ON Resistance (Sink)	R_{ONL}	0.2	0.6	1.3	Ω	I_{OUT}=40mA, OUTA, OUTB
OUT Maximum Current (Source)	$I_{OUTMAXH}$	3.0	4.5	-	A	Guaranteed by design, OUTA, OUTB
OUT Maximum Current (Sink)	$I_{OUTMAXL}$	3.0	3.9	-	A	Guaranteed by design, OUTA, OUTB
OUT Turn ON Time	t_{PON}	35	55	75	ns	OUTA, OUTB
OUT Turn OFF Time	t_{POFF}	35	55	75	ns	OUTA, OUTB
OUT Propagation Distortion	t_{PDIST}	-25	0	25	ns	t_{POFF} – t_{PON}, OUTA, OUTB
Delay Matching, HS&LS Turn ON/OFF	t_{DM}	-	-	25	ns	
OUT Rise Time	t_{RISE}	-	50	-	ns	OUT-GND 10nF, OUTA, OUTB
OUT Fall Time	t_{FALL}	-	50	-	ns	OUT-GND 10nF, OUTA, OUTB
MC ON Resistance	R_{ONMC}	0.20	0.65	1.40	Ω	I_{MC}=40mA, MCA, MCB
MC ON Threshold Voltage	V_{MCON}	1.8	2.0	2.2	V	MCA, MCB
VREG Output Voltage	V_{VREG}	4.2	4.7	5.2	V	
Common Mode Transient Immunity	CM	100	-	-	kV/µs	Guaranteed by design
Protection Functions						
UVLO OFF Voltage	V_{UVLOH}	9.0	9.5	10.0	V	VCCA, VCCB
UVLO ON Voltage	V_{UVLOL}	8.0	8.5	9.0	V	VCCA, VCCB
UVLO Mask Time	$t_{UVLOMSK}$	1.0	2.5	5.0	µs	VCCA, VCCB

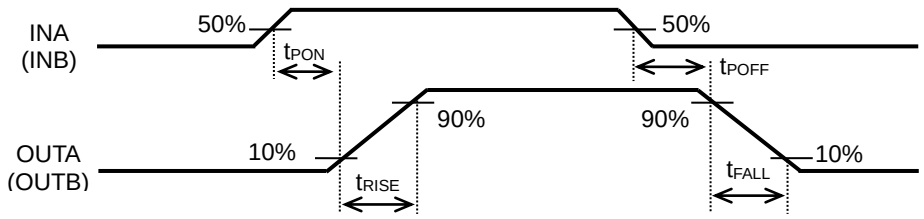

Figure 9. IN-OUT Timing Chart

© 2018 ROHM Co., Ltd. All rights reserved.

Downloaded from Arrow.com.

Typical Performance Curves

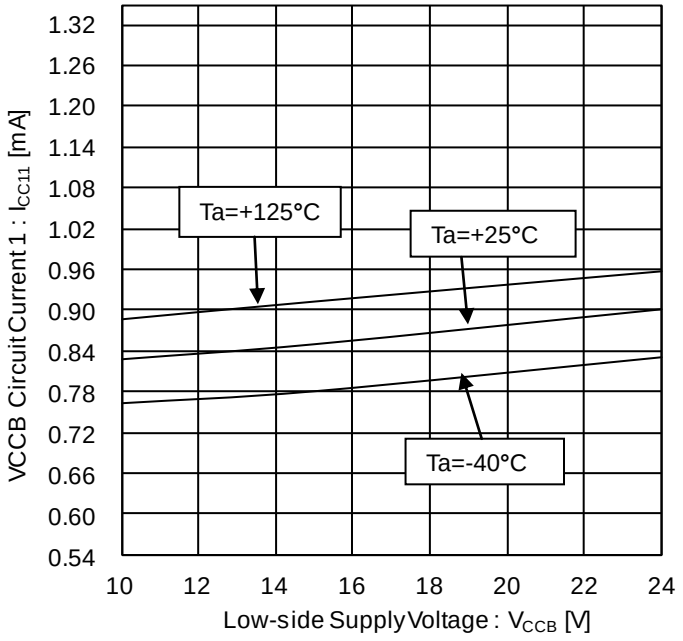

Figure 10. VCCB Circuit Current 1 vs Low-side Supply Voltage (OUTB=L)

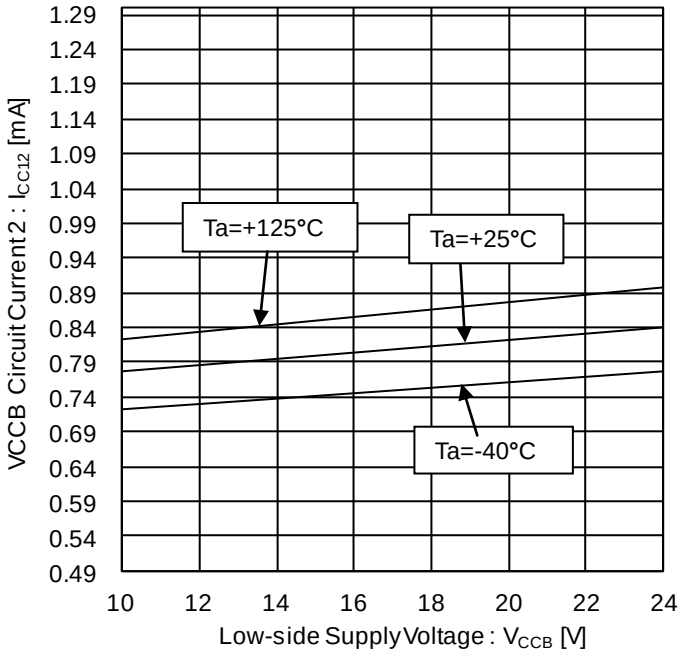

Figure 11. VCCB Circuit Current 2 vs Low-side Supply Voltage (OUTB=H)

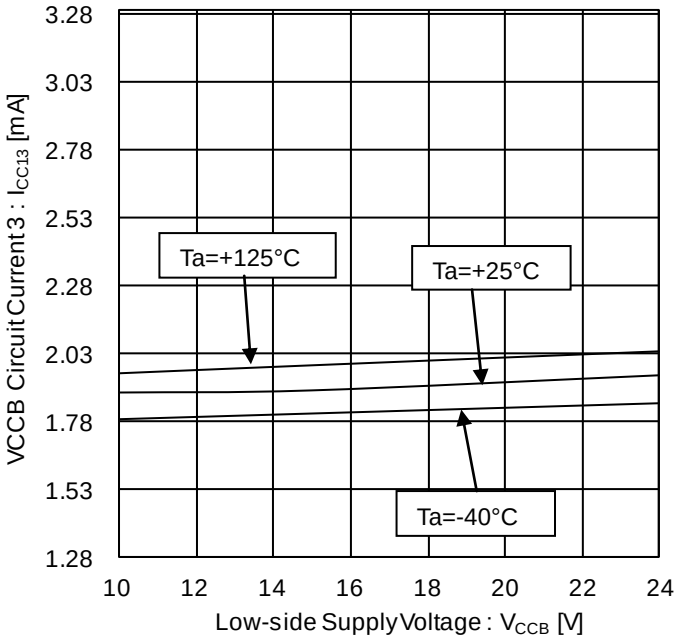

Figure 12. VCCB Circuit Current 3 vs Low-side Supply Voltage（INA=10kHz, Duty=50%）

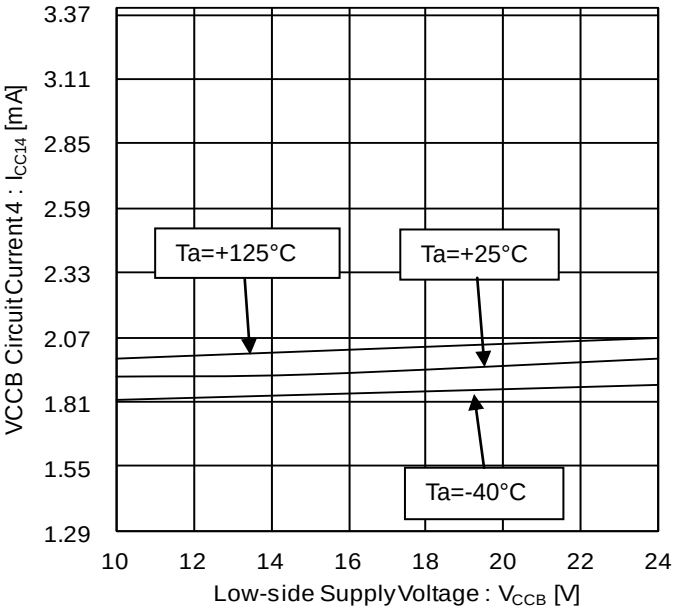

Figure 13. VCCB Circuit Current 4 vs Low-side Supply Voltage (INA=20kHz, Duty=50%)

© 2018 ROHM Co., Ltd. All rights reserved.

Downloaded from Arrow.com.

Typical Performance Curves - continued

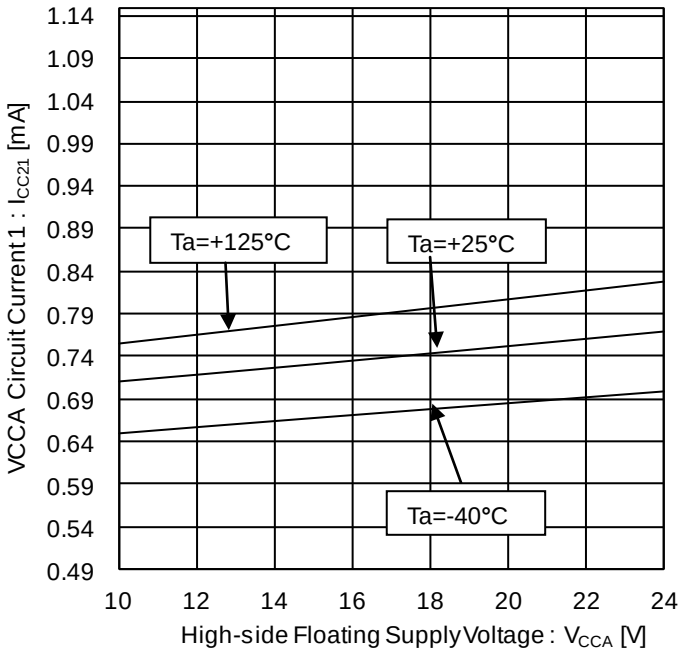

Figure 14. VCCA Circuit Current 1 vs High-side Floating Supply Voltage (OUTA=L)

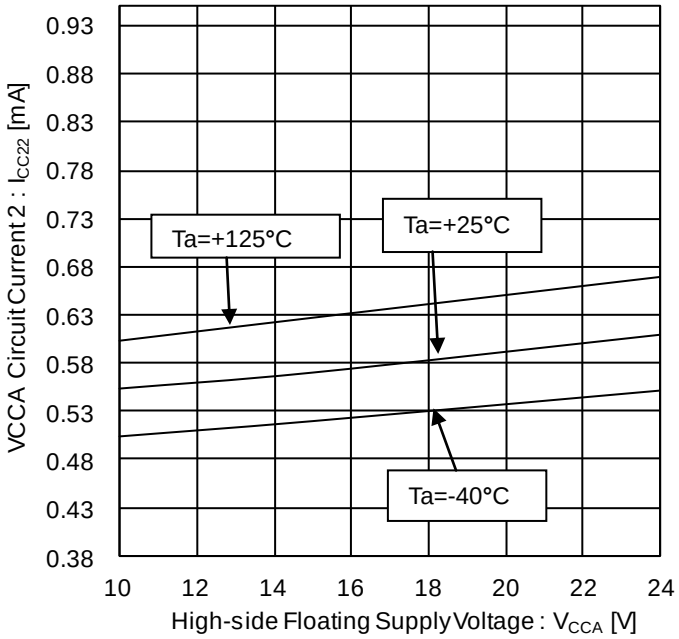

Figure 15. VCCA Circuit Current 2 vs High-side Floating Supply Voltage (OUTA=H)

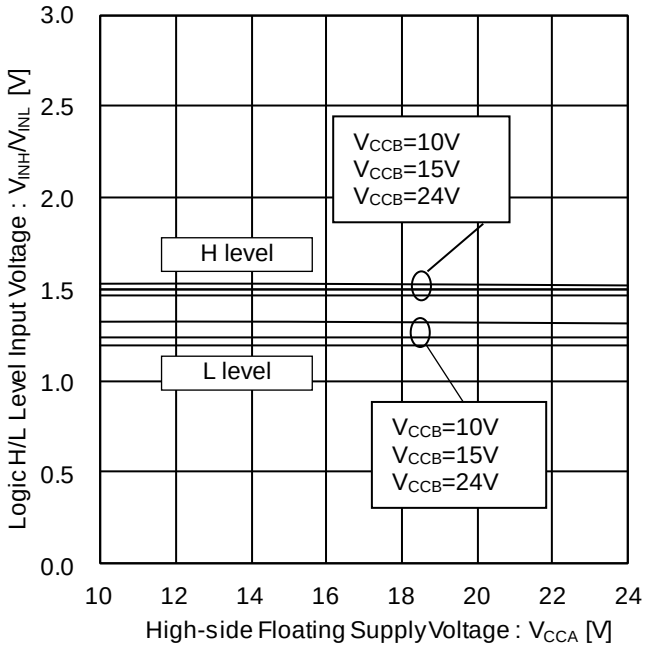

Figure 16. Logic H/L Level Input Voltage vs High-side Floating Supply Voltage

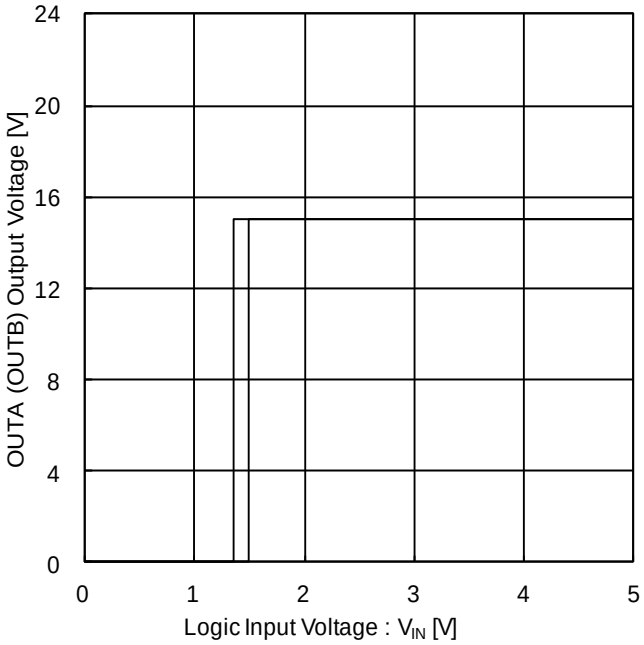

Figure 17. OUTA (OUTB)Output Voltage vs Logic Input Voltage (V_{CCB}=15V, V_{CCA}=15V, Ta=+25°C)

© 2018 ROHM Co., Ltd. All rights reserved.

Downloaded from Arrow.com.

Typical Performance Curves - continued

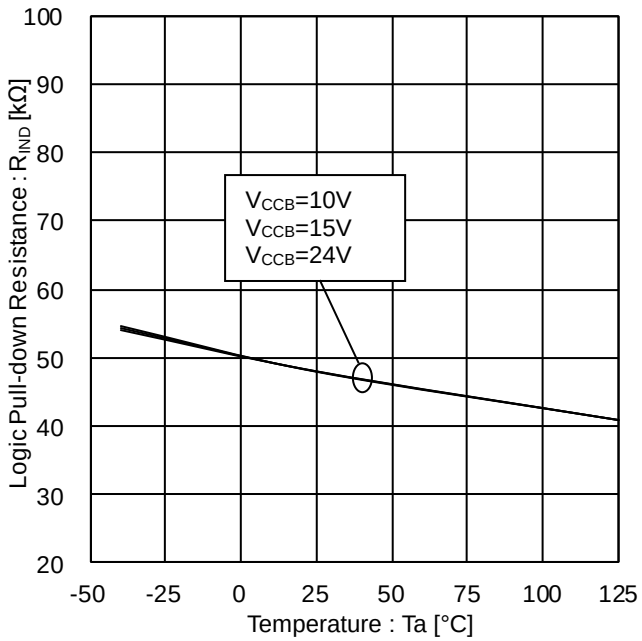

Figure 18. Logic Pull-down Resistance vs Temperature

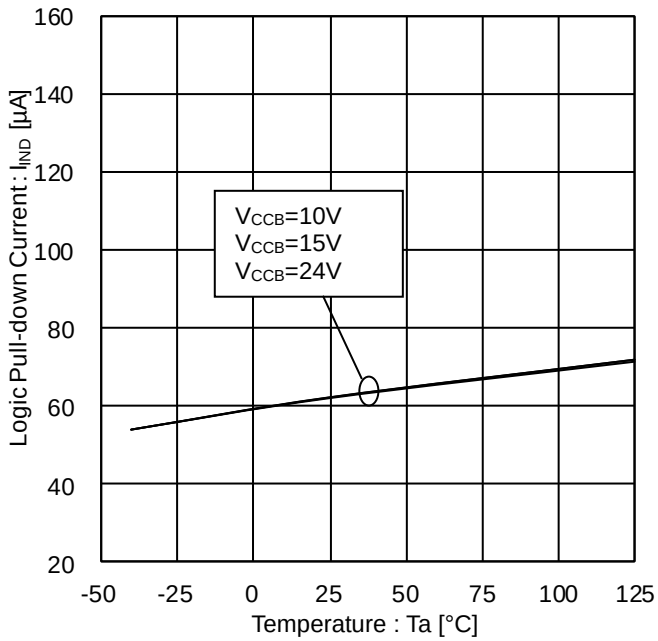

Figure 19. Logic Pull-down Current vs Temperature

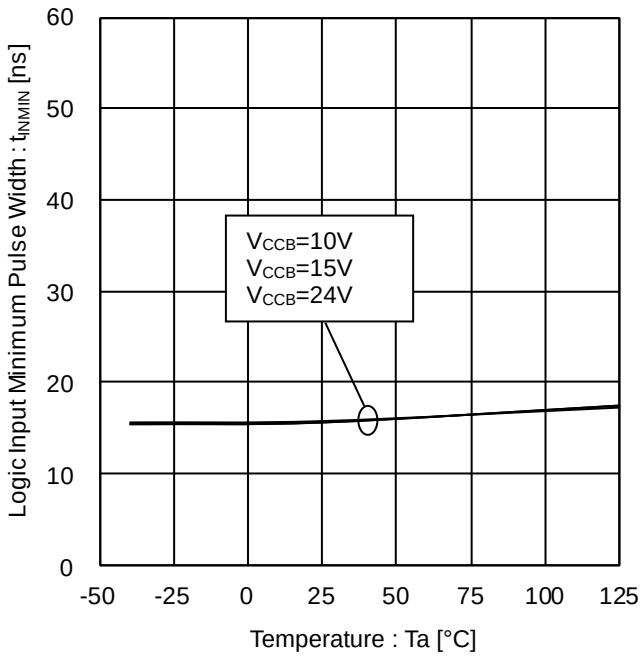

Figure 20. Logic Input Minimum Pulse Width vs Temperature

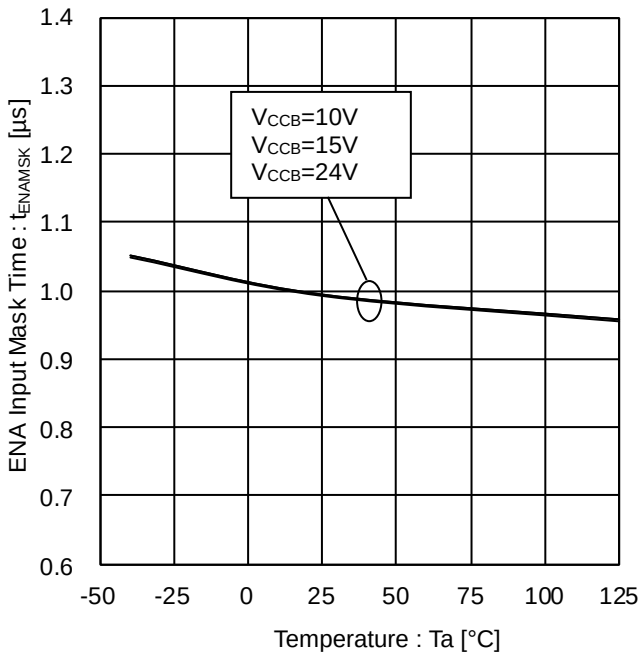

Figure 21. ENA Input Mask Time vs Temperature

© 2018 ROHM Co., Ltd. All rights reserved.

Downloaded from Arrow.com.

Typical Performance Curves - continued

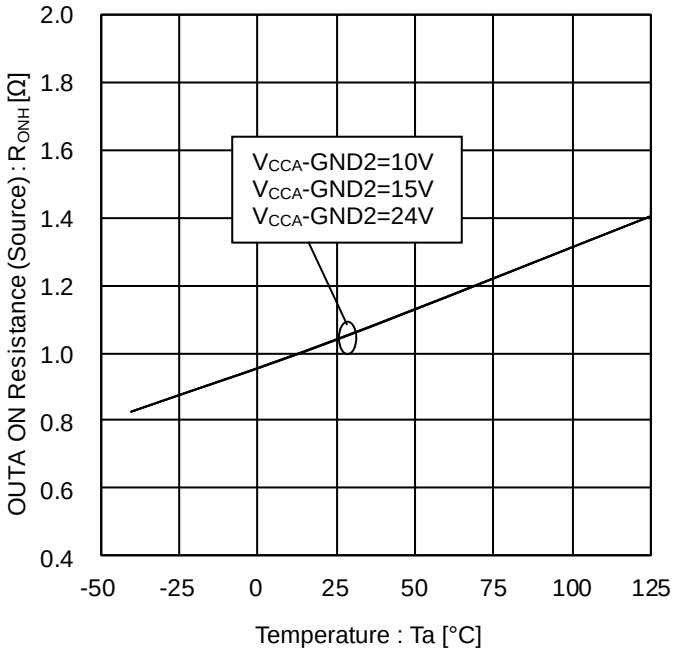

Figure 22. OUTA ON Resistance (Source) vs Temperature

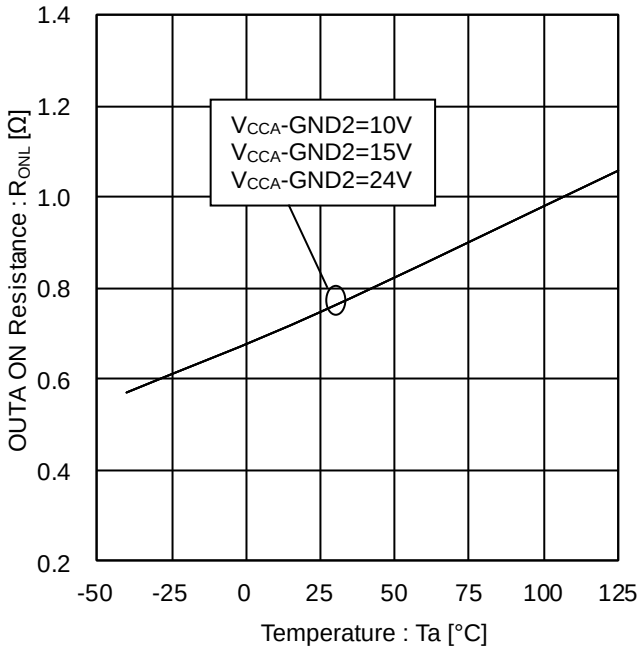

Figure 23. OUTA ON Resistance (Sink) vs Temperature

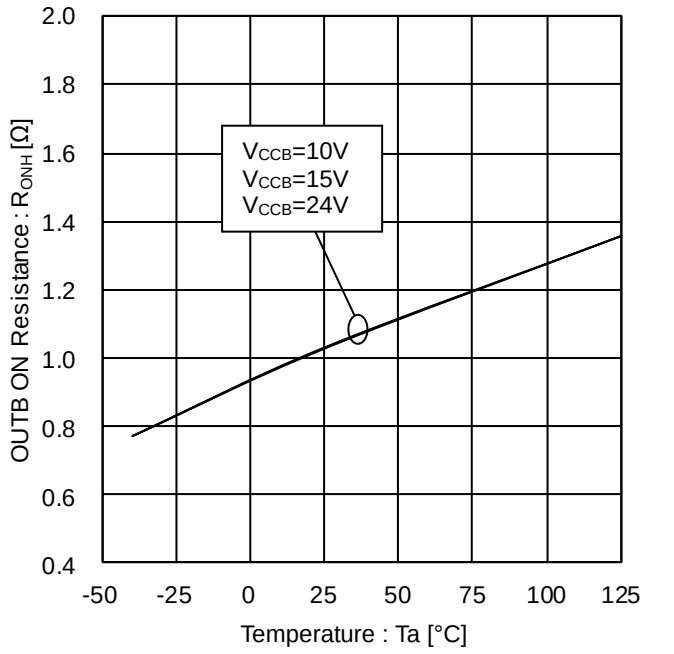

Figure 24. OUTB ON Resistance (Source) vs Temperature

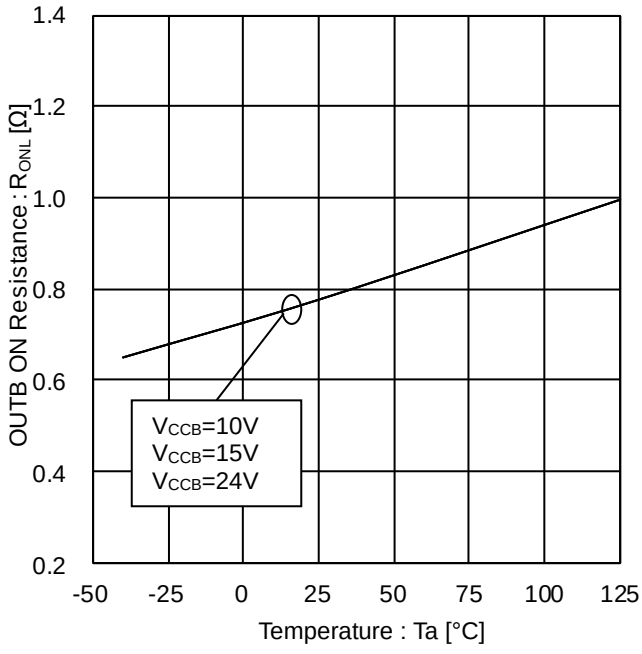

Figure 25. OUTB ON Resistance (Sink) vs Temperature

© 2018 ROHM Co., Ltd. All rights reserved.

Downloaded from Arrow.com.

Typical Performance Curves - continued

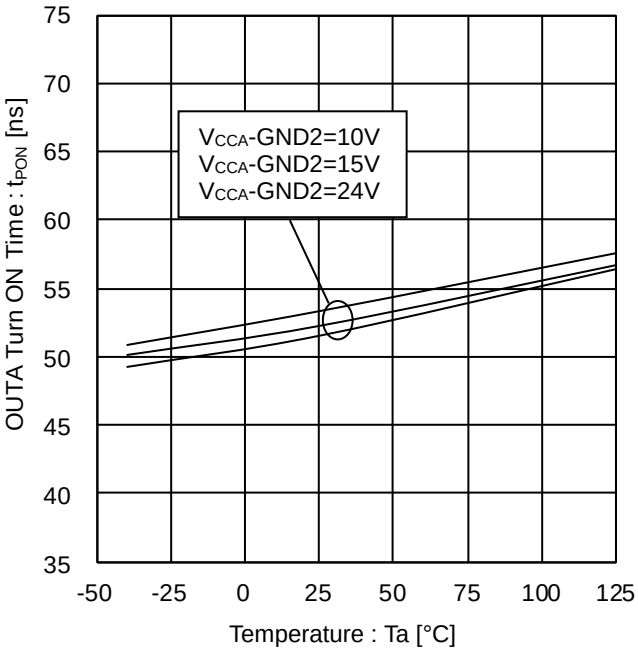

Figure 26. OUTA Turn ON Time vs Temperature
(INA=PWM, INB=L)

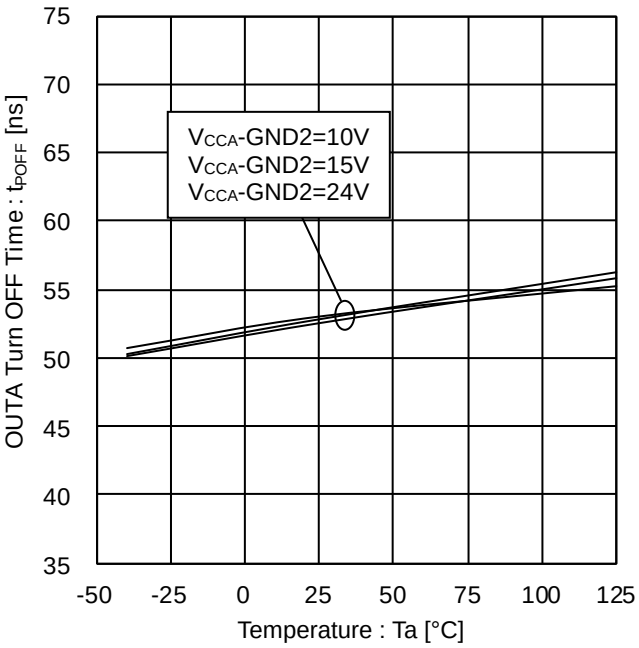

Figure 27. OUTA Turn OFF Time vs Temperature
(INA=PWM, INB=L)

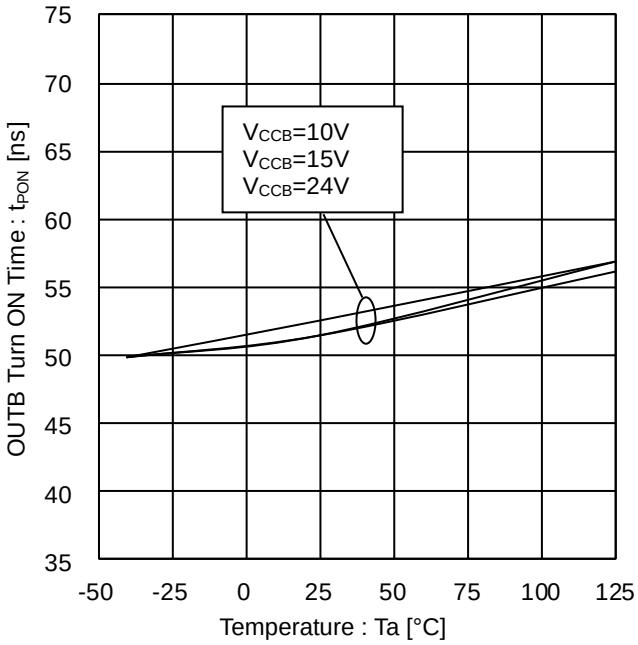

Figure 28. OUTB Turn ON Time vs Temperature
(INA=L, INB=PWM)

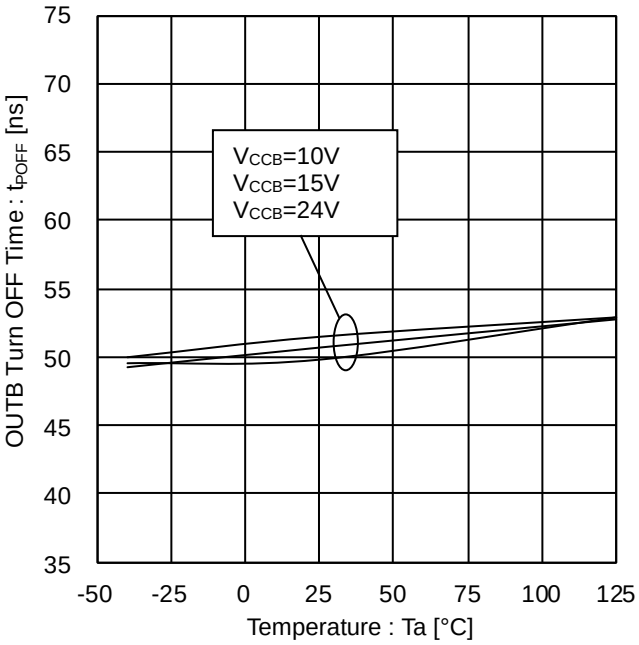

Figure 29. OUTB Turn OFF Time vs Temperature
(INA=L, INB=PWM)

© 2018 ROHM Co., Ltd. All rights reserved.

Downloaded from Arrow.com.

Typical Performance Curves - continued

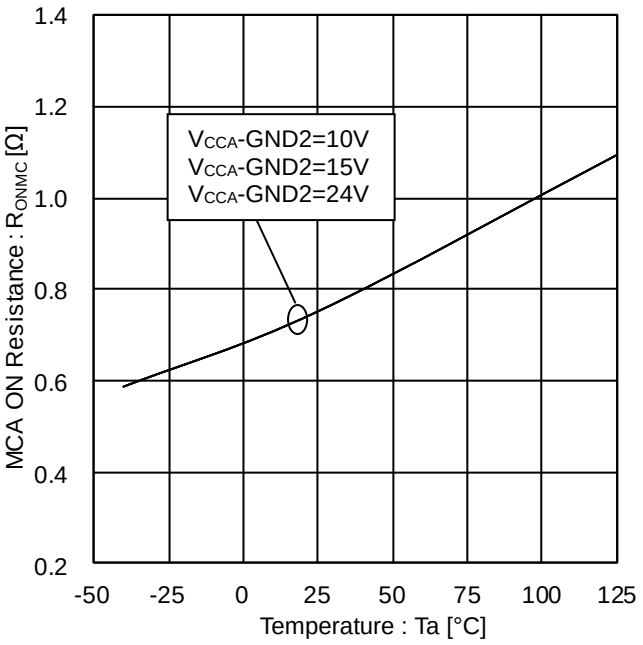

Figure 30. MCA ON Resistance vs Temperature

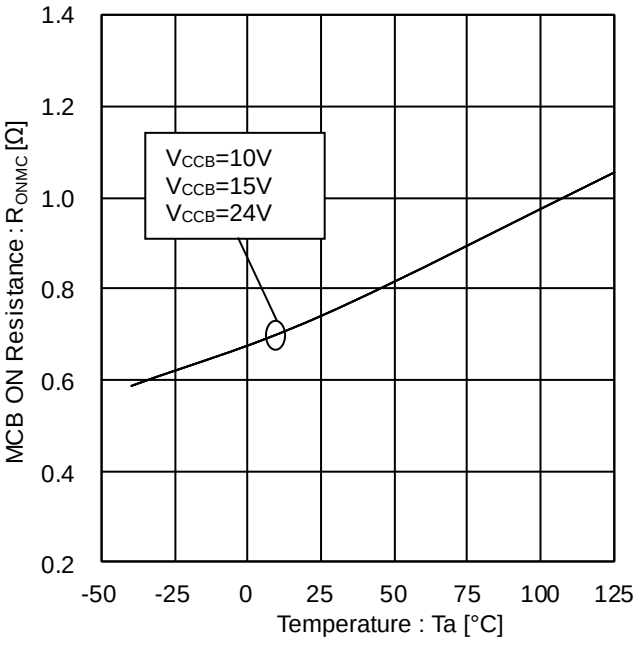

Figure 31. MCB ON Resistance vs Temperature

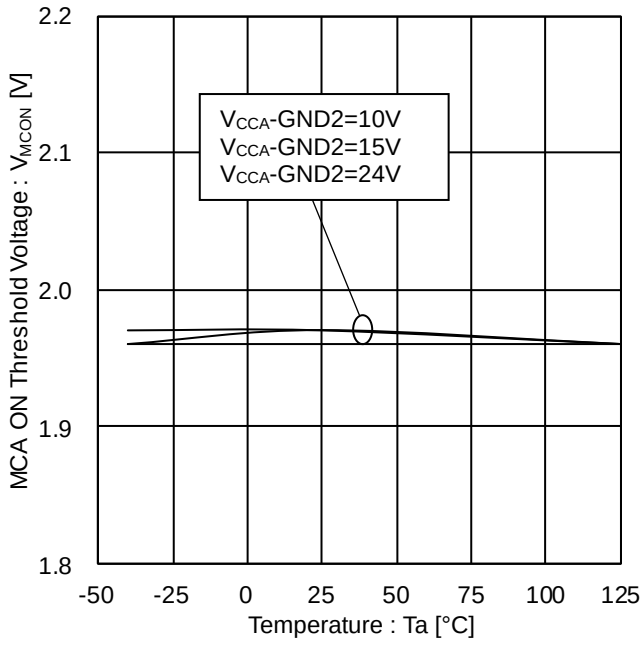

Figure 32. MCA ON Threshold Voltage vs Temperature

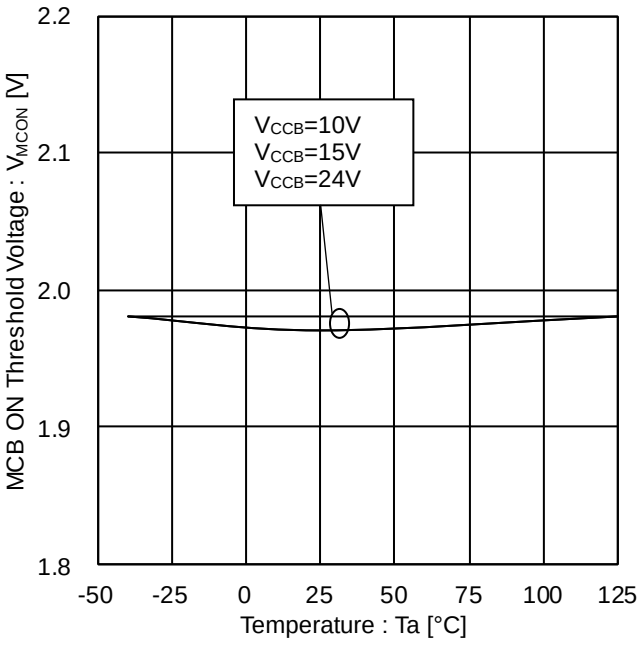

Figure 33. MCB ON Threshold Voltage vs Temperature

© 2018 ROHM Co., Ltd. All rights reserved.

Downloaded from Arrow.com.

Typical Performance Curves - continued

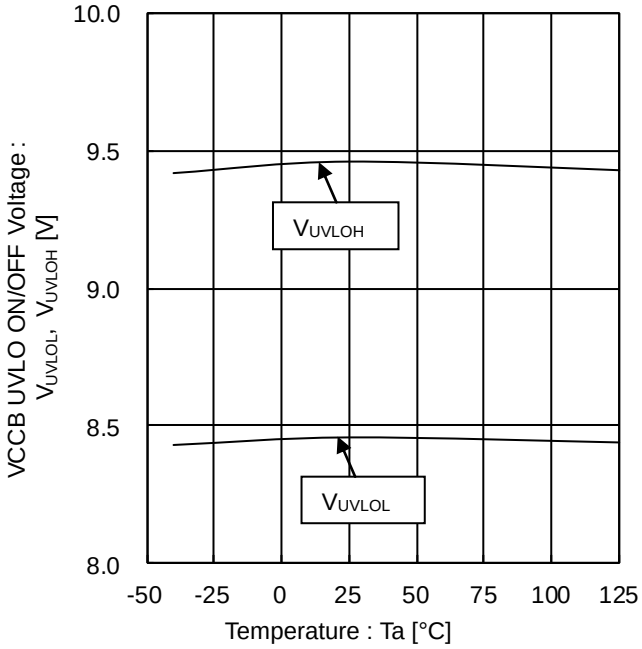

Figure 34. VCCB UVLO ON/OFF Voltage vs Temperature

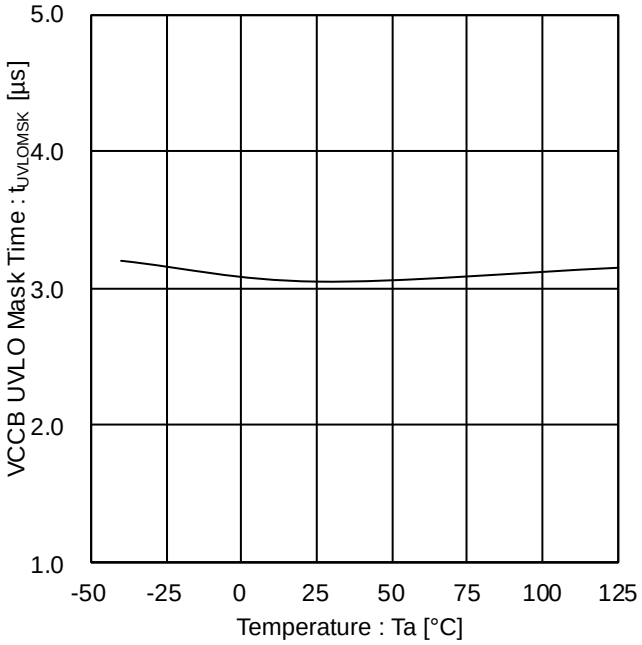

Figure 35. VCCB UVLO Mask Time vs Temperature

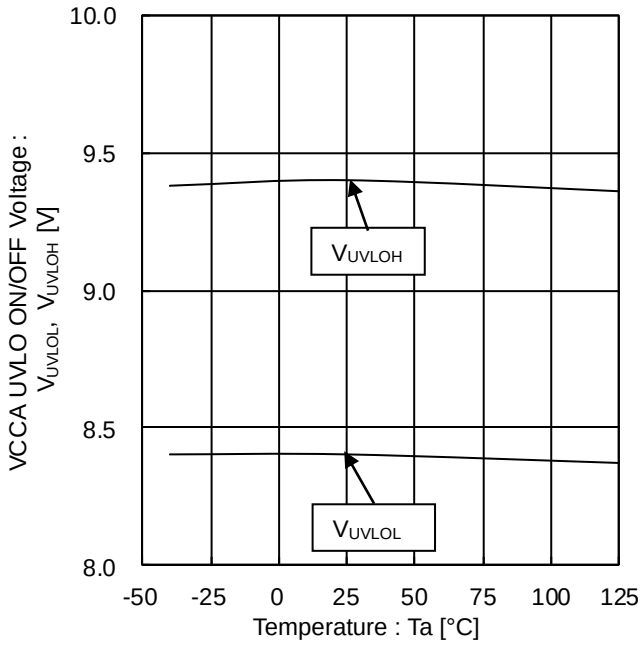

Figure 36. VCCA UVLO ON/OFF Voltage vs Temperature

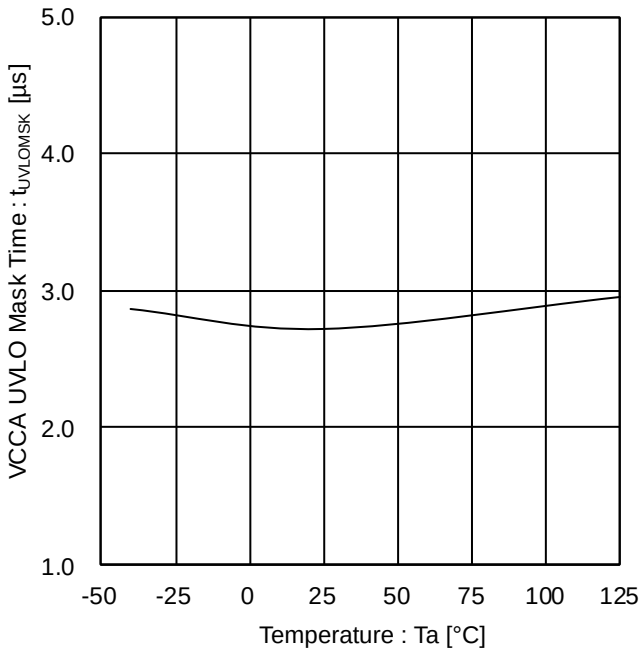

Figure 37. VCCA UVLO Mask Time vs Temperature

© 2018 ROHM Co., Ltd. All rights reserved.

Downloaded from Arrow.com.

I/O Equivalence Circuits

Pin No	Name / Function	I/O equivalence circuits
6	OUTAH High-side output pin (Source)	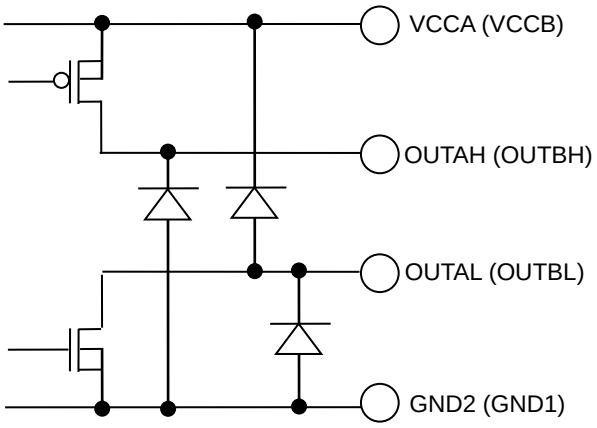
5	OUTAL High-side output pin (Sink)	
17	OUTBH Low-side output pin (Source)	
18	OUTBL Low-side output pin (Sink)	
4	MCA High-side output pin for Miller Clamp	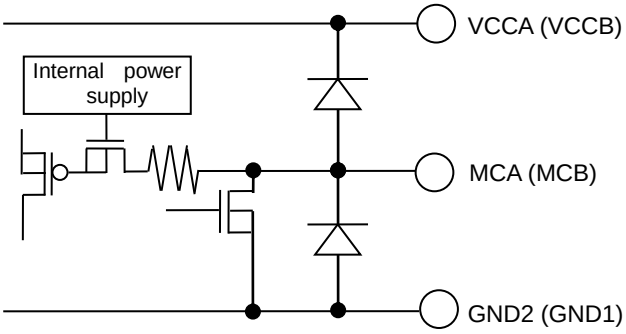
19	MCB Low-side output pin for Miller Clamp	
13	INA Control input pin for high-side	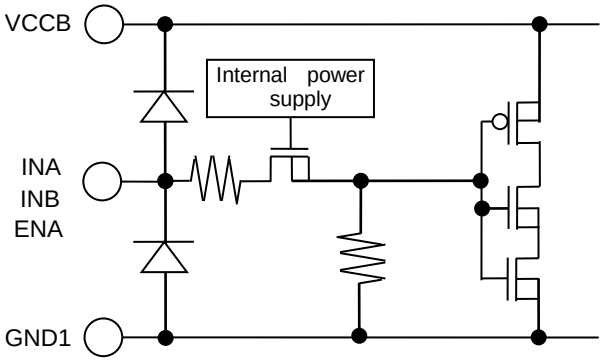
14	INB Control input pin for low-side	
12	ENA Input enabling signal input pin	

© 2018 ROHM Co., Ltd. All rights reserved.

Downloaded from Arrow.com.

Operational Notes

1. **Reverse Connection of Power Supply**
   Connecting the power supply in reverse polarity can damage the IC. Take precautions against reverse polarity when connecting the power supply, such as mounting an external diode between the power supply and the IC's power supply terminals.

2. **Power Supply Lines**
   Design the PCB layout pattern to provide low impedance supply lines. Separate the ground and supply lines of the digital and analog blocks to prevent noise in the ground and supply lines of the digital block from affecting the analog block. Furthermore, connect a capacitor to ground at all power supply pins. Consider the effect of temperature and aging on the capacitance value when using electrolytic capacitors.

3. **Ground Wiring Pattern**
   When using both small-signal and large-current ground traces, the two ground traces should be routed separately but connected to a single ground at the reference point of the application board to avoid fluctuations in the small-signal ground caused by large currents. Also ensure that the ground traces of external components do not cause variations on the ground voltage. The ground lines must be as short and thick as possible to reduce line impedance.

4. **Thermal Consideration**
   Should by any chance the power dissipation rating be exceeded, the rise in temperature of the chip may result in deterioration of the properties of the chip. The absolute maximum rating of the Pd stated in this specification is when the IC is mounted on a 70mm x 70mm x 1.6mm glass epoxy board. In case of exceeding this absolute maximum rating, increase the board size and copper area to prevent exceeding the Pd rating.

5. **Recommended Operating Conditions**
   These conditions represent a range within which the expected characteristics of the IC can be approximately obtained. The electrical characteristics are guaranteed under the conditions of each parameter.

6. **Inrush Current**
   When power is first supplied to the IC, it is possible that the internal logic may be unstable and inrush current may flow instantaneously due to the internal powering sequence and delays, especially if the IC has more than one power supply. Therefore, give special consideration to power coupling capacitance, power wiring, width of ground wiring, and routing of connections.

7. **Operation Under Strong Electromagnetic Field**
   Operating the IC in the presence of a strong electromagnetic field may cause the IC to malfunction.

8. **Testing on Application Boards**
   When testing the IC on an application board, connecting a capacitor directly to a low-impedance output pin may subject the IC to stress. Always discharge capacitors completely after each process or step. The IC's power supply should always be turned off completely before connecting or removing it from the test setup during the inspection process. To prevent damage from static discharge, ground the IC during assembly and use similar precautions during transport and storage.

9. **Inter-pin Short and Mounting Errors**
   Ensure that the direction and position are correct when mounting the IC on the PCB. Incorrect mounting may result in damaging the IC. Avoid nearby pins being shorted to each other especially to ground, power supply and output pin. Inter-pin shorts could be due to many reasons such as metal particles, water droplets (in very humid environment) and unintentional solder bridge deposited in between pins during assembly to name a few.

© 2018 ROHM Co., Ltd. All rights reserved.

Downloaded from Arrow.com.

Operational Notes – continued

10. Unused Input Terminals

Input terminals of an IC are often connected to the gate of a MOS transistor. The gate has extremely high impedance and extremely low capacitance. If left unconnected, the electric field from the outside can easily charge it. The small charge acquired in this way is enough to produce a significant effect on the conduction through the transistor and cause unexpected operation of the IC. So unless otherwise specified, unused input terminals should be connected to the power supply or ground line

11. Regarding Input Pins of the IC

This IC contains P+ isolation and P substrate layers between adjacent elements in order to keep them isolated. P-N junctions are formed at the intersection of the P layers with the N layers of other elements, creating a parasitic diode or transistor. For example (refer to figure below):

When GND > Pin A and GND > Pin B, the P-N junction operates as a parasitic diode.
When GND > Pin B, the P-N junction operates as a parasitic transistor.

Parasitic diodes inevitably occur in the structure of the IC. The operation of parasitic diodes can result in mutual interference among circuits, operational faults, or physical damage. Therefore, conditions that cause these diodes to operate, such as applying a voltage lower than the GND voltage to an input pin (and thus to the P substrate) should be avoided.

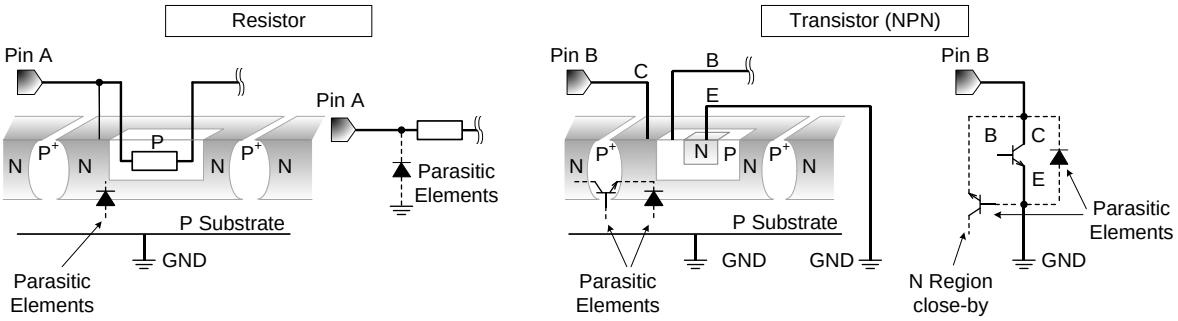

Figure 38. Example of IC structure

12. Ceramic Capacitor

When using a ceramic capacitor, determine the dielectric constant considering the change of capacitance with temperature and the decrease in nominal capacitance due to DC bias and others. Operation (ASO).

13. Area of Safe Operation (ASO)

Operate the IC such that the output voltage, output current, and power dissipation are all within the Area of Safe Operation (ASO).

© 2018 ROHM Co., Ltd. All rights reserved.

Downloaded from Arrow.com.

Ordering Information

B	M	6	0	2	1	2	F	V	-	CE 2

Part Number

Package
FV: SSOP-B20W

Rank
C:for Automotive applications
Packaging and forming specification
E2: Embossed tape and reel

Marking Diagram

SSOP-B20W(TOP VIEW)

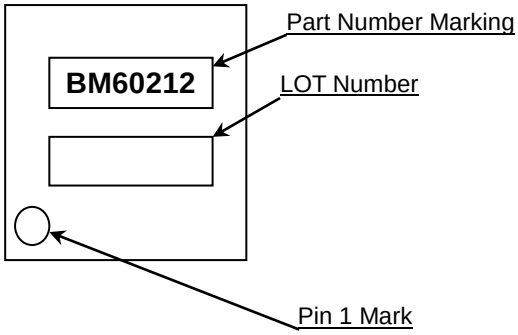

© 2018 ROHM Co., Ltd. All rights reserved.

Downloaded from Arrow.com.

Physical Dimension, Tape and Reel Information

Package Name	SSOP-B20W

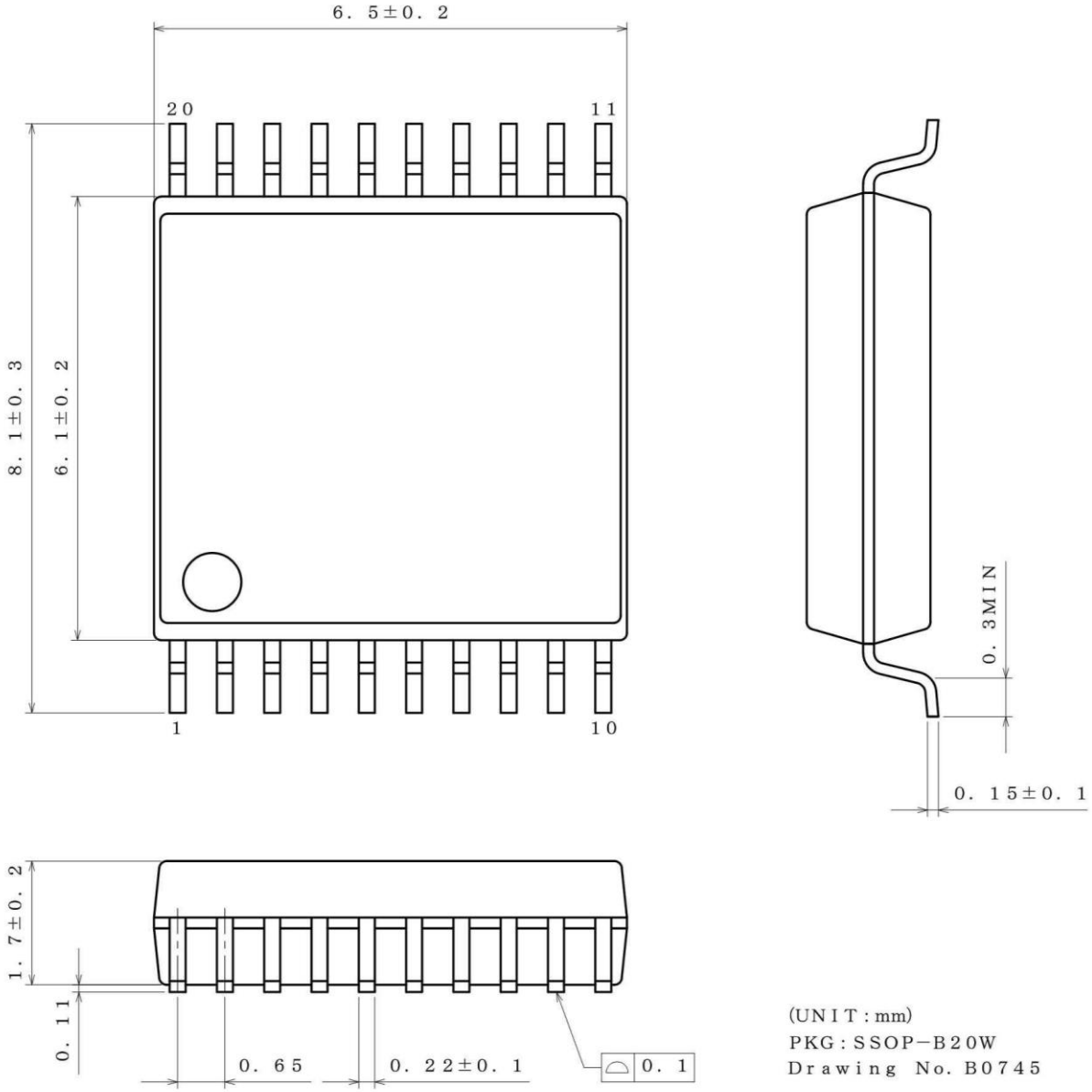

<Tape and Reel information>

Tape	Embossed carrier tape
Quantity	2000pcs
Direction of feed	E2 (The direction is the 1pin of product is at the upper left when you hold reel on the left hand and you pull out the tape on the right hand)

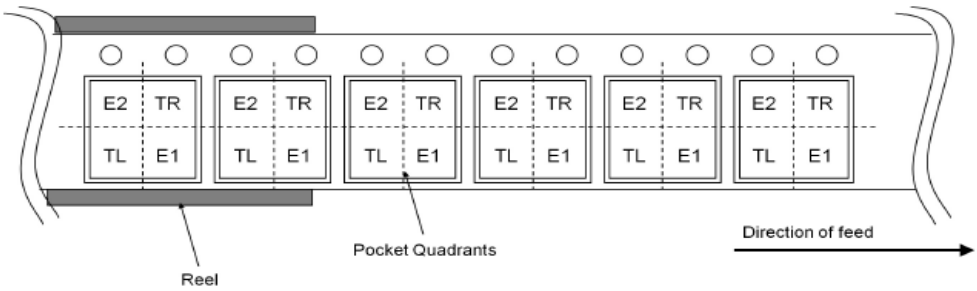

© 2018 ROHM Co., Ltd. All rights reserved.

Downloaded from Arrow.com.

Revision History

Date	Revision	Changes
18.Jan.2018	001	New Release

© 2018 ROHM Co., Ltd. All rights reserved.

Downloaded from Arrow.com.

Notice

Precaution on using ROHM Products

1. If you intend to use our Products in devices requiring extremely high reliability (such as medical equipment (Note 1), aircraft/spacecraft, nuclear power controllers, etc.) and whose malfunction or failure may cause loss of human life, bodily injury or serious damage to property ("Specific Applications"), please consult with the ROHM sales representative in advance. Unless otherwise agreed in writing by ROHM in advance, ROHM shall not be in any way responsible or liable for any damages, expenses or losses incurred by you or third parties arising from the use of any ROHM's Products for Specific Applications.

(Note1) Medical Equipment Classification of the Specific Applications

JAPAN	USA	EU	CHINA
CLASSⅢ	CLASSⅢ	CLASSⅡb	CLASSⅢ
CLASSⅣ		CLASSⅢ	

2. ROHM designs and manufactures its Products subject to strict quality control system. However, semiconductor products can fail or malfunction at a certain rate. Please be sure to implement, at your own responsibilities, adequate safety measures including but not limited to fail-safe design against the physical injury, damage to any property, which a failure or malfunction of our Products may cause. The following are examples of safety measures:
   [a] Installation of protection circuits or other protective devices to improve system safety
   [b] Installation of redundant circuits to reduce the impact of single or multiple circuit failure

3. Our Products are not designed under any special or extraordinary environments or conditions, as exemplified below. Accordingly, ROHM shall not be in any way responsible or liable for any damages, expenses or losses arising from the use of any ROHM's Products under any special or extraordinary environments or conditions. If you intend to use our Products under any special or extraordinary environments or conditions (as exemplified below), your independent verification and confirmation of product performance, reliability, etc, prior to use, must be necessary:
   [a] Use of our Products in any types of liquid, including water, oils, chemicals, and organic solvents
   [b] Use of our Products outdoors or in places where the Products are exposed to direct sunlight or dust
   [c] Use of our Products in places where the Products are exposed to sea wind or corrosive gases, including Cl_2, H_2S, NH_3, SO_2, and NO_2
   [d] Use of our Products in places where the Products are exposed to static electricity or electromagnetic waves
   [e] Use of our Products in proximity to heat-producing components, plastic cords, or other flammable items
   [f] Sealing or coating our Products with resin or other coating materials
   [g] Use of our Products without cleaning residue of flux (even if you use no-clean type fluxes, cleaning residue of flux is recommended); or Washing our Products by using water or water-soluble cleaning agents for cleaning residue after soldering
   [h] Use of the Products in places subject to dew condensation

4. The Products are not subject to radiation-proof design.

5. Please verify and confirm characteristics of the final or mounted products in using the Products.

6. In particular, if a transient load (a large amount of load applied in a short period of time, such as pulse. is applied, confirmation of performance characteristics after on-board mounting is strongly recommended. Avoid applying power exceeding normal rated power; exceeding the power rating under steady-state loading condition may negatively affect product performance and reliability.

7. De-rate Power Dissipation depending on ambient temperature. When used in sealed area, confirm that it is the use in the range that does not exceed the maximum junction temperature.

8. Confirm that operation temperature is within the specified range described in the product specification.

9. ROHM shall not be in any way responsible or liable for failure induced under deviant condition from what is defined in this document.

Precaution for Mounting / Circuit board design

1. When a highly active halogenous (chlorine, bromine, etc.) flux is used, the residue of flux may negatively affect product performance and reliability.

2. In principle, the reflow soldering method must be used on a surface-mount products, the flow soldering method must be used on a through hole mount products. If the flow soldering method is preferred on a surface-mount products, please consult with the ROHM representative in advance.

For details, please refer to ROHM Mounting specification

© 2015 ROHM Co., Ltd. All rights reserved.

Downloaded from Arrow.com.

Precautions Regarding Application Examples and External Circuits

1. If change is made to the constant of an external circuit, please allow a sufficient margin considering variations of the characteristics of the Products and external components, including transient characteristics, as well as static characteristics.

2. You agree that application notes, reference designs, and associated data and information contained in this document are presented only as guidance for Products use. Therefore, in case you use such information, you are solely responsible for it and you must exercise your own independent verification and judgment in the use of such information contained in this document. ROHM shall not be in any way responsible or liable for any damages, expenses or losses incurred by you or third parties arising from the use of such information.

Precaution for Electrostatic

This Product is electrostatic sensitive product, which may be damaged due to electrostatic discharge. Please take proper caution in your manufacturing process and storage so that voltage exceeding the Products maximum rating will not be applied to Products. Please take special care under dry condition (e.g. Grounding of human body / equipment / solder iron, isolation from charged objects, setting of Ionizer, friction prevention and temperature / humidity control).

Precaution for Storage / Transportation

1. Product performance and soldered connections may deteriorate if the Products are stored in the places where:
   [a] the Products are exposed to sea winds or corrosive gases, including Cl2, H2S, NH3, SO2, and NO2
   [b] the temperature or humidity exceeds those recommended by ROHM
   [c] the Products are exposed to direct sunshine or condensation
   [d] the Products are exposed to high Electrostatic

2. Even under ROHM recommended storage condition, solderability of products out of recommended storage time period may be degraded. It is strongly recommended to confirm solderability before using Products of which storage time is exceeding the recommended storage time period.

3. Store / transport cartons in the correct direction, which is indicated on a carton with a symbol. Otherwise bent leads may occur due to excessive stress applied when dropping of a carton.

4. Use Products within the specified time after opening a humidity barrier bag. Baking is required before using Products of which storage time is exceeding the recommended storage time period.

Precaution for Product Label

A two-dimensional barcode printed on ROHM Products label is for ROHM's internal use only.

Precaution for Disposition

When disposing Products please dispose them properly using an authorized industry waste company.

Precaution for Foreign Exchange and Foreign Trade act

Since concerned goods might be fallen under listed items of export control prescribed by Foreign exchange and Foreign trade act, please consult with ROHM in case of export.

Precaution Regarding Intellectual Property Rights

1. All information and data including but not limited to application example contained in this document is for reference only. ROHM does not warrant that foregoing information or data will not infringe any intellectual property rights or any other rights of any third party regarding such information or data.

2. ROHM shall not have any obligations where the claims, actions or demands arising from the combination of the Products with other articles such as components, circuits, systems or external equipment (including software).

3. No license, expressly or implied, is granted hereby under any intellectual property rights or other rights of ROHM or any third parties with respect to the Products or the information contained in this document. Provided, however, that ROHM will not assert its intellectual property rights or other rights against you or your customers to the extent necessary to manufacture or sell products containing the Products, subject to the terms and conditions herein.

Other Precaution

1. This document may not be reprinted or reproduced, in whole or in part, without prior written consent of ROHM.

2. The Products may not be disassembled, converted, modified, reproduced or otherwise changed without prior written consent of ROHM.

3. In no event shall you use in any way whatsoever the Products and the related technical information contained in the Products or this document for any military purposes, including but not limited to, the development of mass-destruction weapons.

4. The proper names of companies or products described in this document are trademarks or registered trademarks of ROHM, its affiliated companies or third parties.

© 2015 ROHM Co., Ltd. All rights reserved.

Downloaded from Arrow.com.

General Precaution

1. Before you use our Products, you are requested to carefully read this document and fully understand its contents. ROHM shall not be in any way responsible or liable for failure, malfunction or accident arising from the use of any ROHM's Products against warning, caution or note contained in this document.

2. All information contained in this document is current as of the issuing date and subject to change without any prior notice. Before purchasing or using ROHM's Products, please confirm the latest information with a ROHM sales representative.

3. The information contained in this document is provided on an "as is" basis and ROHM does not warrant that all information contained in this document is accurate and/or error-free. ROHM shall not be in any way responsible or liable for any damages, expenses or losses incurred by you or third parties resulting from inaccuracy or errors of or concerning such information.

© 2015 ROHM Co., Ltd. All rights reserved.

Downloaded from Arrow.com.