770988-3 ✔ ACTIVE

MATE-N-LOK | Mini-Universal MATE-N-LOK

TE Internal #: 770988-3

Power Contacts, Contact, 600 VAC, 600 VDC, Gold, 22 – 18 AWG Wire Size, .3 – .9 mm² Wire Size, Wire & Cable, Crimp, Power, Mini-Universal MATE-N-LOK

View on TE.com >

Connectors > Power Connectors > Power Contacts

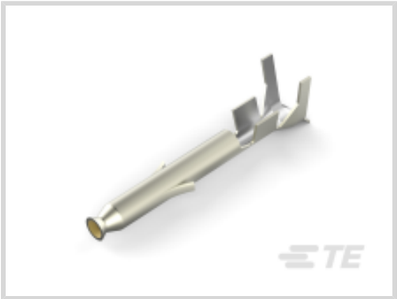

Power Contact Type: **Contact**

Operating Voltage: **600 VDC**

Contact Mating Area Plating Material: **Gold**

Wire Size: **22 – 18 AWG**

Features

Product Type Features

Compatible With Discrete Wire Type	Stranded
Power Contact Type	Contact
Connector & Contact Terminates To	Wire & Cable

Electrical Characteristics

Operating Voltage	600 VDC

Contact Features

Contact Mating Area Plating Material	Gold
Contact Current Rating (Max)	11.2 A
Contact Type	Socket
Contact Retention Within Housing	With
Mating Pin Diameter	1 mm[.039 in]
Contact Base Material	Brass
Contact Mating Area Plating Material Thickness	.76 µm[30 µin]
Wire Contact Termination Area Plating Thickness	2.54 µm[100 µin]
Wire Contact Termination Area Plating Material	Tin-Lead

Wire Contact Termination Area Plating Material Finish	Matte
Contact Orientation	Straight
Contact Underplating Material	Nickel
Contact Underplating Material Thickness	1.27 µm[50 µin]

Termination Features

Termination Method to Wire & Cable	Crimp

Mechanical Attachment

Wire Insulation Support	Without

Dimensions

Wire Size	.3 – .9 mm²
Compatible Insulation Diameter Range	1.5 – 2.39 mm[.059 – .094 in]

Usage Conditions

Operating Temperature Range	-55 – 105 °C[-67 – 221 °F]

Operation/Application

Circuit Application	Power

Industry Standards

CSA Rating	Certified, LR 7189
UL Rating	Recognized
Agency/Standard	CSA, UL

Packaging Features

Packaging Quantity	1000
Packaging Method	Bag

Product Compliance

For compliance documentation, visit the product page on TE.com>

EU RoHS Directive 2011/65/EU	Not Compliant
EU ELV Directive 2000/53/EC	Compliant with Exemptions
China RoHS 2 Directive MIIT Order No 32, 2016	Restricted Materials Above Threshold
EU REACH Regulation (EC) No. 1907/2006	Current ECHA Candidate List: JUNE 2023 (235) Candidate List Declared Against: JAN 2023 (233) SVHC > Threshold:

	Pb (13% in Component Part) Article Safe Usage Statements: Do not eat, drink or smoke when using this product. Wash thoroughly after handling. Recycle if possible and dispose of the article by following all applicable governmental regulations relevant to your geographic location.
Halogen Content	Low Halogen - Br, Cl, F, I < 900 ppm per homogenous material. Also BFR/CFR/PVC Free
Solder Process Capability	Not applicable for solder process capability

Product Compliance Disclaimer

This information is provided based on reasonable inquiry of our suppliers and represents our current actual knowledge based on the information they provided. This information is subject to change. The part numbers that TE has identified as EU RoHS compliant have a maximum concentration of 0.1% by weight in homogenous materials for lead, hexavalent chromium, mercury, PBB, PBDE, DBP, BBP, DEHP, DIBP, and 0.01% for cadmium, or qualify for an exemption to these limits as defined in the Annexes of Directive 2011/65/EU (RoHS2). Finished electrical and electronic equipment products will be CE marked as required by Directive 2011/65/EU. Components may not be CE marked. Additionally, the part numbers that TE has identified as EU ELV compliant have a maximum concentration of 0.1% by weight in homogenous materials for lead, hexavalent chromium, and mercury, and 0.01% for cadmium, or qualify for an exemption to these limits as defined in the Annexes of Directive 2000/53/EC (ELV). Regarding the REACH Regulation, the information TE provides on SVHC in articles for this part number is based on the latest European Chemicals Agency (ECHA) 'Guidance on requirements for substances in articles' posted at this URL: https://echa.europa.eu/guidance-documents/guidance-on-reach

Compatible Parts

TE Part # CAT-AM71-C83998EE
Mini Circular Plastic Connectors (CPC)

TE Part # 91522-1
CCII MINI UNML PIN SKT 22-18 ASSY

TE Part # 90759-1
PROCRIMP TL W/DIE MIN UNIV MNL

TE Part # 455830-1
INSERTION TOOL

TE Part # 770586-1
22P MINI UMNL PLUG HSG

TE Part # 794942-1
10P MINI UMNL CAP HSG

TE Part # 770587-1
24P MINI UMNL PLUG HSG

TE Part # 770582-1
14P MINI UMNL PLUG HSG

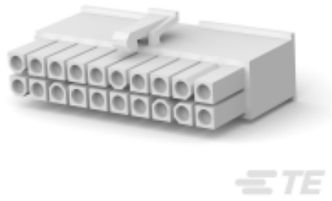

TE Part # 770585-1
20P MINI UMNL PLUG HSG

TE Part # 172333-1
MINI UNIVERSAL M-N-L HOUSING

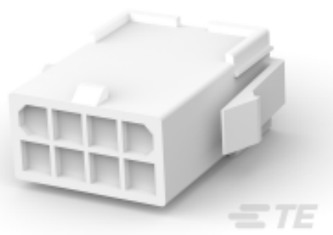

TE Part # 794941-1
08P MINI UMNL CAP HSG

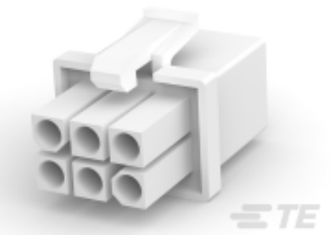

TE Part # 794895-1
6 CIR MINI UMNL RND WIRE HOLES

TE Part # 794821-1
08P MINI UMNL PLUG HSG

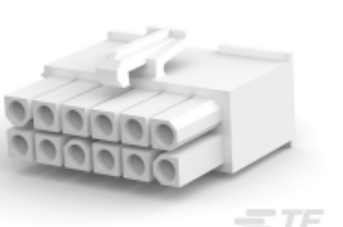

TE Part # 770581-1
12P MINI UMNL PLUG HSG

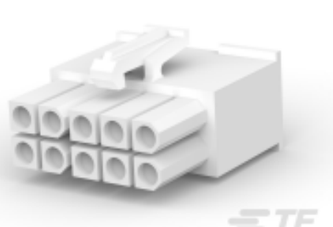

TE Part # 770580-1
10P MINI UMNL PLUG HSG

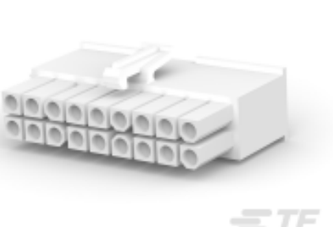

TE Part # 770584-1
18P MINI UMNL PLUG HSG

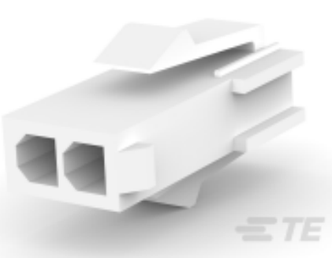

TE Part # 172328-1
MINI UNIVERSAL MATE-N-LOK CAP HOUSING 2P

TE Part # 172330-1
MINI UNIVERSAL MATE-N-LOK CAP HOUSING 4P

TE Part # 172344-1
MINI UNIVERSAL MATE-N-LOK CAP HOUSING 3P

TE Part # 172170-1
12 CIR UNIV M-N-L PLUG

Also in the Series | Mini-Universal MATE-N-LOK

Connector Backshells(2)

Connector Contacts(8)

Connector Strain Relief(2)

Insertion & Extraction Tools(1)

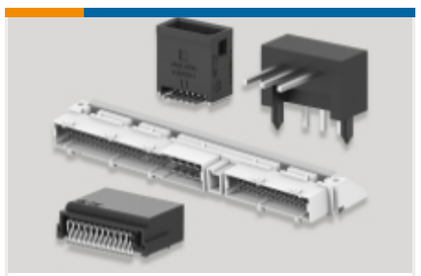

PCB Headers & Receptacles(1)

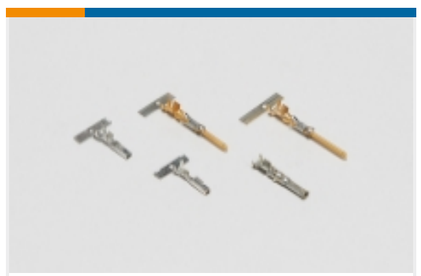

Power Contacts(84)

Rectangular Connector Keying Plugs(2)

Rectangular Connector Locking(2)

Rectangular Connector Seals(17)

Rectangular Power Connectors(243)

Customers Also Bought

TE Part #1445534-3
PLUG,8-3,LARGE INS,STD KEY

TE Part #1558676-1
T9GS1L24-5

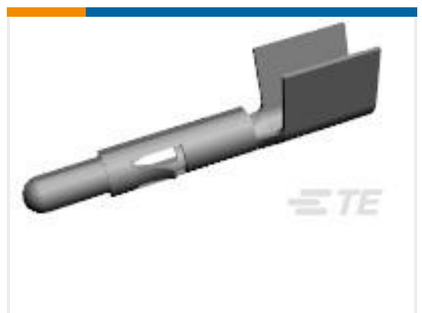

TE Part #640309-6
UMNL PIN 12-10 AU/PHBZ

TE Part #350705-7
UMNL SPLIT PIN 20-14 AUBR L/P

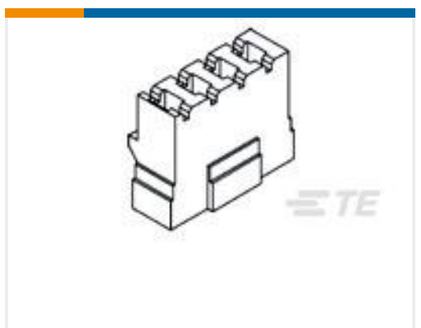

TE Part #1609146-2
PA102 CONNECTOR PIN=F6999

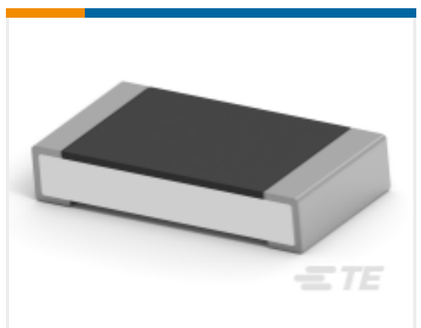

TE Part #1-2176390-8
RQ 1206 1K74 0.1% 10PPM 5K RL

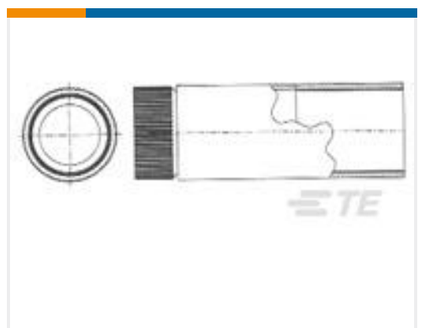

TE Part #1546997-1
STR RLF ASSY,TUBING,SIZE 8

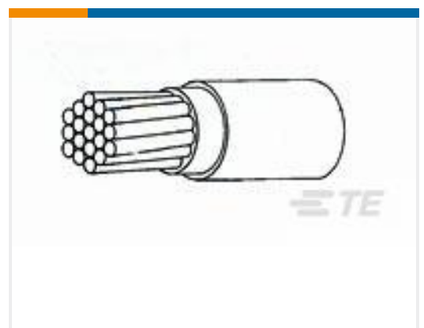

TE Part #282243-000
44A0111-14-8

TE Part #770873-2
03P MINI UMNL HDR ASSY VO AU

Documents

Product Drawings

MINI UMNL SOK 22-18AWG AU LP

English

CAD Files

Customer View Model

ENG_CVM_CVM_770988-3_E.2d_dxf.zip

English

3D PDF

3D

Customer View Model

ENG_CVM_CVM_770988-3_E.3d_igs.zip

English

Customer View Model

ENG_CVM_CVM_770988-3_E.3d_stp.zip

English

By downloading the CAD file I accept and agree to the Terms and Conditions of use.

Datasheets & Catalog Pages

SOFT_SHELL_PIN_AND_SOCKET_CONNECTORS_CATALOG

English

Product Specifications

Application Specification

English

Product Environmental Compliance

MD_770988-3_040420142318_dmtec

English

MD_770988-3_040420142318_dmtec

English

Instruction Sheets

Instruction Sheet (U.S.)

English