Innovative Service Around the Globe YAGEO

DATA SHEET

TRANSIENT VOLTAGE SUPPRESSORS
AC/DC POWER SUPPLY

SMAJ-AT series

RoHS compliant & Halogen free

Product specification– June 30, 2023 V.4

Transient Voltage Suppressors (TVS) Data Sheet

Features

- For surface mounted applications in order to optimize board space
- Low profile package
- Glass passivated junction
- Low inductance
- Excellent clamping capability
- 400W peak pulse power capability at 10/1000μs waveform, repetition rate (duty cycle): 0.01%
- Fast response time
- Typical I_R less than 1μA above 10V
- High Temperature soldering: 260℃/10 seconds at terminals
- Plastic package has underwriters laboratory flammability 94V-0
- Meets MSL level 1, per J-STD-020
- Safety certification: UL
- AEC-Q101 qualified
- IEC61000-4-2 ESD 30KV Air, 30KV contact compliance

Mechanical Data

- Case: JEDEC DO-214AC. Molded plastic over glass passivated junction
- Terminal: Tin plated, solderable per MIL-STD-750, Method 2026
- Polarity: Color band denotes cathode except bi-directional models
- Standard Packaging: 12mm tape (EIA STD RS-481)
- Weight: 0.07g

Applications

- I/O interface
- AC/DC power supply
- Low frequency signal transmission line (RS232, RS485, etc.)

Maximum Ratings and Characteristics

Ratings at 25℃ ambient temperature unless otherwise specified.

Rating	Symbol	Value	Units
Peak pulse power dissipation at 10/1000μs waveform (Note1, Note2, Fig.1)	P_{PPM}	Minimum 400	Watts
Peak pulse current of at 10/1000μs waveform (Note 1, Fig.3)	I_{PPM}	See Table	Amps
Steady state power dissipation at T_A=50℃ (Fig.5)	$P_{M(AV)}$	3.3	Watts
Peak forward surge current, 8.3ms single half sine-wave superimposed on rated load, (JEDEC Method) (Note3, Fig.6)	I_{FSM}	40	Amps
Operating junction and Storage Temperature Range.	T_J,T_{STG}	-55 to +150	℃
Typical thermal resistance junction to lead	$R_{\theta JL}$	30	℃/W
Typical thermal resistance junction to ambient	$R_{\theta JA}$	120	℃/W

Notes: 1. Non-repetitive current pulse, per Fig.3 and derated above T_A=25℃ per Fig.2.
2. Mounted on 5.0mm×5.0mm (0.03mm thick) copper pads to each terminal.
3. 8.3ms single half sine-wave, or equivalent square wave, duty cycle=4 pulses per minutes maximum.

Dimensions (SMA/DO-214AC)

Product:

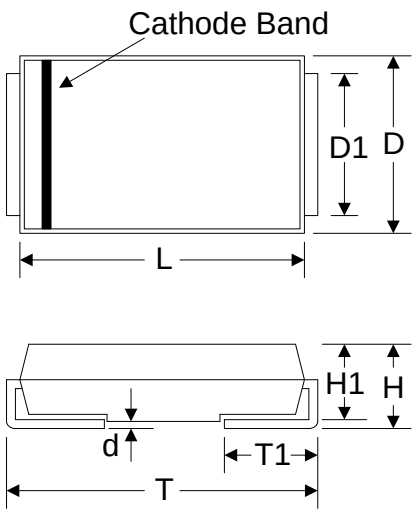

Pad:

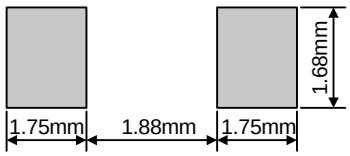

Symbol	Millimeters		Inches	
	Min.	Max.	Min.	Max.
L	3.99	4.50	0.157	0.177
D	2.54	2.79	0.100	0.110
D1	1.25	1.65	0.049	0.065
T	4.93	5.28	0.194	0.208
T1	0.76	1.52	0.030	0.060
d	-	0.203	-	0.008
H	2.00	2.50	0.079	0.098
H1	1.98	2.29	0.078	0.090

Electrical Characteristics (T_A=25℃)

Part Number		Device Marking Code		Reverse Stand-Off Voltage	Breakdown Voltage @I_T	Test Current	Maximum Clamping Voltage @I_{PP}	Peak Pulse Current	Reverse Leakage @V_{RWM}
Unidirectional	Bidirectional	UNI	BI	V_{RWM}(V)	V_{BR}(V)	I_T(mA)	V_C(V)	I_{PP}(A)	I_R(μA)
SMAJ5.0A-AT	SMAJ5.0CA-AT	AE	WE	5.0	6.40~7.00	10	9.2	43.5	800
SMAJ6.0A-AT	SMAJ6.0CA-AT	AG	WG	6.0	6.67~7.37	10	10.3	38.8	800
SMAJ6.5A-AT	SMAJ6.5CA-AT	AK	WK	6.5	7.22~7.98	10	11.2	35.7	500
SMAJ7.0A-AT	SMAJ7.0CA-AT	AM	WM	7.0	7.78~8.60	10	12.0	33.3	200
SMAJ7.5A-AT	SMAJ7.5CA-AT	AP	WP	7.5	8.33~9.21	1	12.9	31.0	100
SMAJ8.0A-AT	SMAJ8.0CA-AT	AR	WR	8.0	8.89~9.83	1	13.6	29.4	50
SMAJ8.5A-AT	SMAJ8.5CA-AT	AT	WT	8.5	9.44~10.40	1	14.4	27.8	20
SMAJ9.0A-AT	SMAJ9.0CA-AT	AV	WV	9.0	10.00~11.10	1	15.4	26.0	10
SMAJ10A-AT	SMAJ10CA-AT	AX	WX	10.0	11.10~12.30	1	17.0	23.5	5
SMAJ11A-AT	SMAJ11CA-AT	AZ	WZ	11.0	12.20~13.50	1	18.2	22.0	1
SMAJ12A-AT	SMAJ12CA-AT	BE	XE	12.0	13.30~14.70	1	19.9	20.1	1
SMAJ13A-AT	SMAJ13CA-AT	BG	XG	13.0	14.40~15.90	1	21.5	18.6	1
SMAJ14A-AT	SMAJ14CA-AT	BK	XK	14.0	15.60~17.20	1	23.2	17.2	1
SMAJ15A-AT	SMAJ15CA-AT	BM	XM	15.0	16.70~18.50	1	24.4	16.4	1
SMAJ16A-AT	SMAJ16CA-AT	BP	XP	16.0	17.80~19.70	1	26.0	15.4	1
SMAJ17A-AT	SMAJ17CA-AT	BR	XR	17.0	18.90~20.90	1	27.6	14.5	1
SMAJ18A-AT	SMAJ18CA-AT	BT	XT	18.0	20.00~22.10	1	29.2	13.7	1

Part Number		Device Marking Code		Reverse Stand-Off Voltage	Breakdown Voltage @I_T	Test Current	Maximum Clamping Voltage @I_{PP}	Peak Pulse Current	Reverse Leakage @V_{RWM}
Unidirectional	Bidirectional	UNI	BI	V_{RWM}(V)	V_{BR}(V)	I_T(mA)	V_C(V)	I_{PP}(A)	I_R(μA)
SMAJ20A-AT	SMAJ20CA-AT	BV	XV	20.0	22.20~24.50	1	32.4	12.3	1
SMAJ22A-AT	SMAJ22CA-AT	BX	XX	22.0	24.40~26.90	1	35.5	11.3	1
SMAJ24A-AT	SMAJ24CA-AT	BZ	XZ	24.0	26.70~29.50	1	38.9	10.3	1
SMAJ26A-AT	SMAJ26CA-AT	CE	YE	26.0	28.90~31.90	1	42.1	9.5	1
SMAJ28A-AT	SMAJ28CA-AT	CG	YG	28.0	31.10~34.40	1	45.4	8.8	1
SMAJ30A-AT	SMAJ30CA-AT	CK	YK	30.0	33.30~36.80	1	48.4	8.3	1
SMAJ33A-AT	SMAJ33CA-AT	CM	YM	33.0	36.70~40.60	1	53.3	7.5	1
SMAJ36A-AT	SMAJ36CA-AT	CP	YP	36.0	40.00~44.20	1	58.1	6.9	1
SMAJ40A-AT	SMAJ40CA-AT	CR	YR	40.0	44.40~49.10	1	64.5	6.2	1
SMAJ43A-AT	SMAJ43CA-AT	CT	YT	43.0	47.80~52.80	1	69.4	5.8	1
SMAJ45A-AT	SMAJ45CA-AT	CV	YV	45.0	50.00~55.30	1	72.7	5.5	1
SMAJ48A-AT	SMAJ48CA-AT	CX	YX	48.0	53.30~58.90	1	77.4	5.2	1
SMAJ51A-AT	SMAJ51CA-AT	CZ	YZ	51.0	56.70~62.70	1	82.4	4.9	1
SMAJ54A-AT	SMAJ54CA-AT	RE	ZE	54.0	60.00~66.30	1	87.1	4.6	1
SMAJ58A-AT	SMAJ58CA-AT	RG	ZG	58.0	64.40~71.20	1	93.6	4.3	1
SMAJ60A-AT	SMAJ60CA-AT	RK	ZK	60.0	66.70~73.70	1	96.8	4.1	1
SMAJ64A-AT	SMAJ64CA-AT	RM	ZM	64.0	71.10~78.60	1	103.0	3.9	1
SMAJ70A-AT	SMAJ70CA-AT	RP	ZP	70.0	77.80~86.00	1	113.0	3.5	1
SMAJ75A-AT	SMAJ75CA-AT	RR	ZR	75.0	83.30~92.10	1	121.0	3.3	1
SMAJ78A-AT	SMAJ78CA-AT	RT	ZT	78.0	86.70~95.80	1	126.0	3.2	1
SMAJ85A-AT	SMAJ85CA-AT	RV	ZV	85.0	94.40~104.00	1	137.0	2.9	1
SMAJ90A-AT	SMAJ90CA-AT	RX	ZX	90.0	100.00~111.00	1	146.0	2.7	1
SMAJ100A-AT	SMAJ100CA-AT	RZ	ZZ	100.0	111.00~123.00	1	162.0	2.5	1
SMAJ110A-AT	SMAJ110CA-AT	SE	VE	110.0	122.00~135.00	1	177.0	2.3	1
SMAJ120A-AT	SMAJ120CA-AT	SG	VG	120.0	133.00~147.00	1	193.0	2.1	1
SMAJ130A-AT	SMAJ130CA-AT	SK	VK	130.0	144.00~159.00	1	209.0	1.9	1
SMAJ150A-AT	SMAJ150CA-AT	SM	VM	150.0	167.00~185.00	1	243.0	1.6	1
SMAJ160A-AT	SMAJ160CA-AT	SP	VP	160.0	178.00~197.00	1	259.0	1.5	1
SMAJ170A-AT	SMAJ170CA-AT	SR	VR	170.0	189.00~209.00	1	275.0	1.5	1
SMAJ180A-AT	SMAJ180CA-AT	ST	VT	180.0	201.00~222.00	1	292.0	1.4	1
SMAJ190A-AT	SMAJ190CA-AT	SU	YU	190.0	211.00~233.00	1	308.0	1.3	1
SMAJ200A-AT	SMAJ200CA-AT	SV	VV	200.0	224.00~247.00	1	324.0	1.2	1
SMAJ210A-AT	SMAJ210CA-AT	SW	YW	210.0	237.00~263.00	1	340.0	1.2	1
SMAJ220A-AT	SMAJ220CA-AT	GE	VX	220.0	246.00~272.00	1	356.0	1.1	1
SMAJ250A-AT	SMAJ250CA-AT	SZ	VZ	250.0	279.00~309.00	1	405.0	1.0	1
SMAJ300A-AT	SMAJ300CA-AT	TE	UE	300.0	335.00~371.00	1	486.0	0.8	1
SMAJ350A-AT	SMAJ350CA-AT	TG	UG	350.0	391.00~432.00	1	567.0	0.7	1
SMAJ400A-AT	SMAJ400CA-AT	TK	UK	400.0	447.00~494.00	1	648.0	0.6	1
SMAJ440A-AT	SMAJ440CA-AT	TM	UM	440.0	492.00~543.00	1	713.0	0.6	1

Ratings and Characteristic Curves (T_A=25℃ unless otherwise noted)

Figure 1. Peak Pulse Power Rating Curve

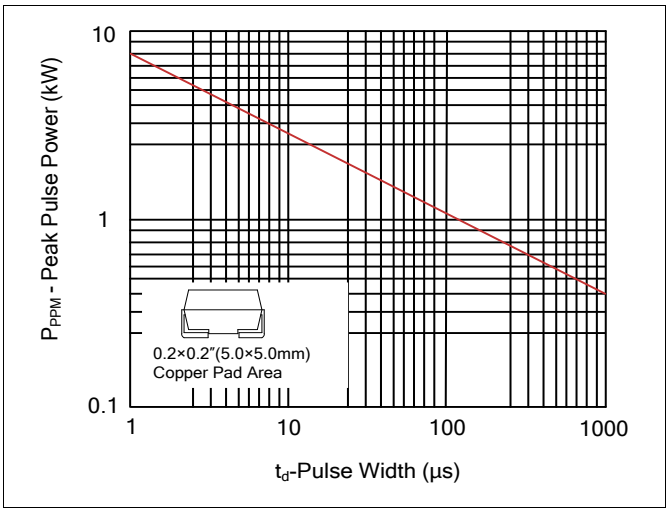

Figure 2. Pulse Derating Curve

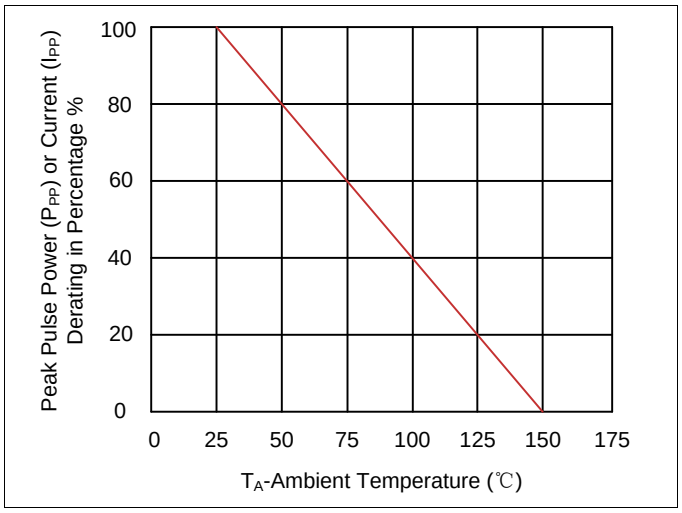

Figure 3. Pulse Waveform

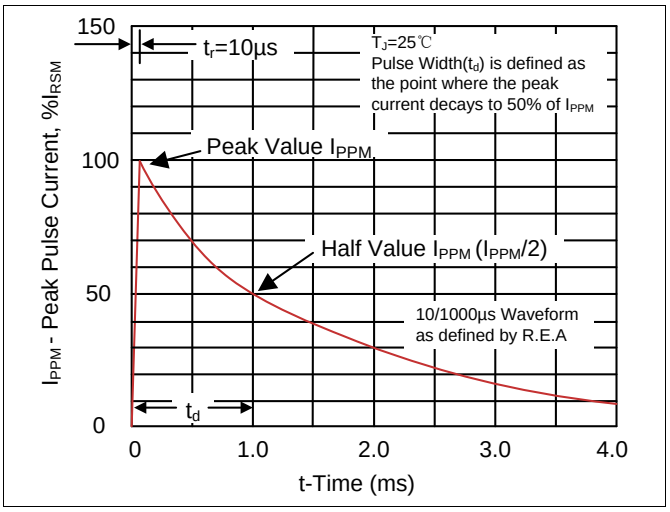

Figure 4. Typical Junction Capacitance

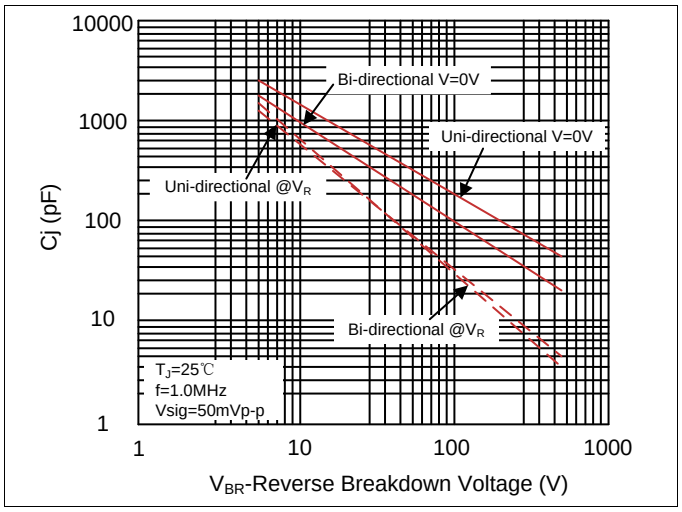

Figure 5. Steady State Power Dissipation Derating Curve

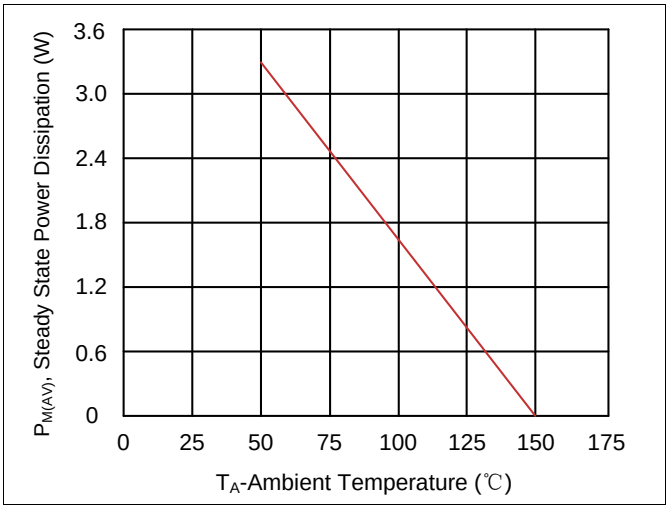

Figure 6. Maximum Non-Repetitive Forward Surge Current Uni-Directional Only

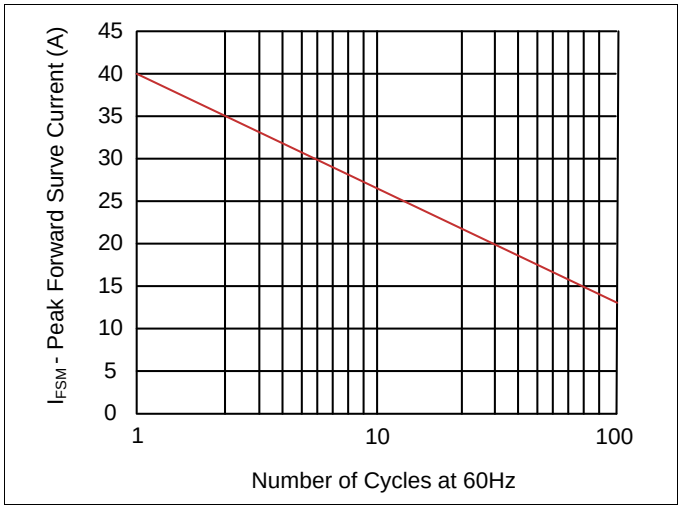

Recommended Soldering Conditions

Reflow Soldering

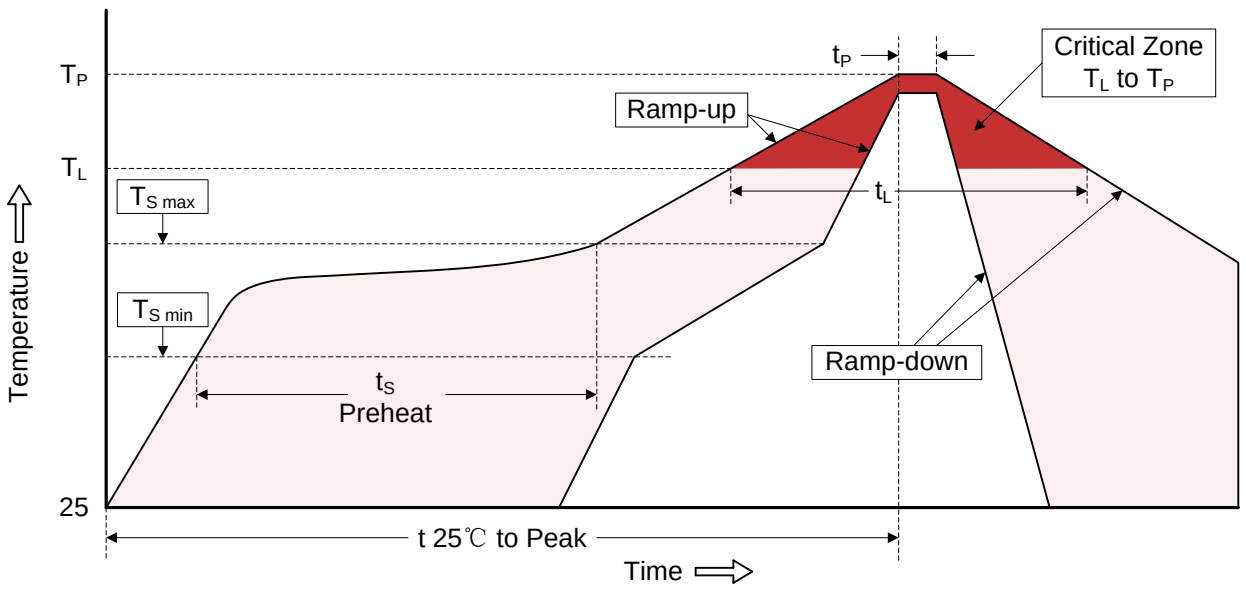

Recommended Conditions

Profile Feature	Pb-Free Assembly
Average ramp-up rate (T_L to T_P)	3℃/second max.
Preheat -Temperature Min ($T_{S\,min}$) -Temperature Max ($T_{S\,max}$) -Time (min to max) (t_S)	 150℃ 200℃ 60-180 seconds
$T_{S\,max}$ to T_L -Ramp-up Rate	 3℃/second max.
Time maintained above: -Temperature (T_L) -Time (t_L)	 217℃ 60-150 seconds
Peak Temperature (T_P)	260℃
Time within 5 ℃ of actual Peak	20-40 seconds
Ramp-down Rate	6℃/second max.
Time 25℃ to Peak Temperature	8 minutes max.

Marking Code

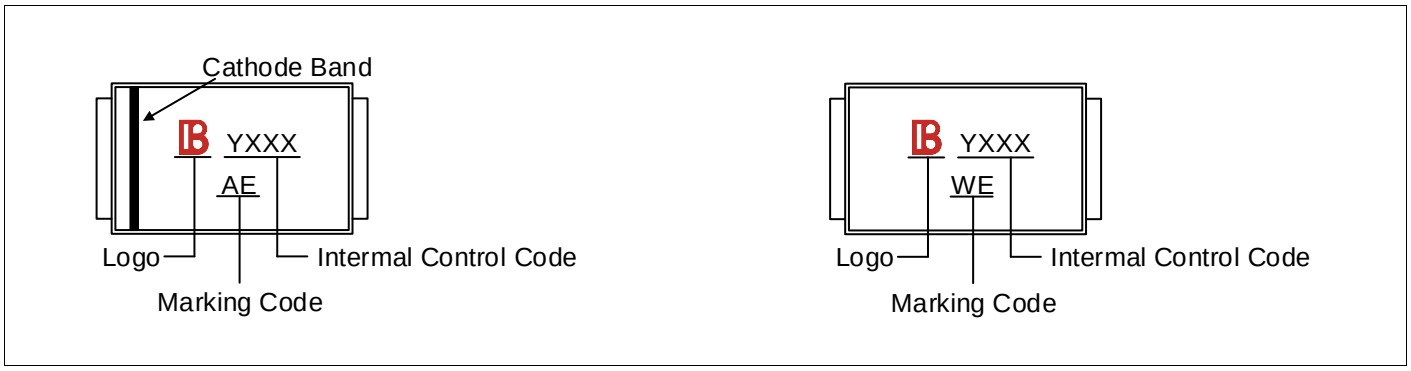

Part Number Code

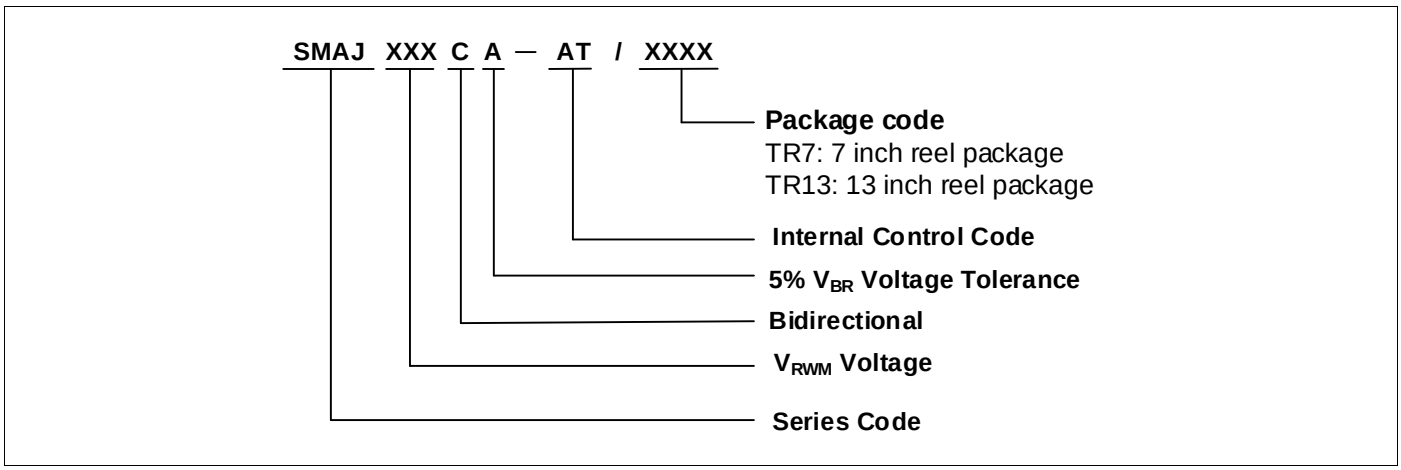

Ordering Code for Different Package

7 inch reel package: Add suffix " /TR7 " at the end of the part number, such as SMAJXXXCA-AT/TR7
13 inch reel package: Add suffix " /TR13 " at the end of the part number, such as SMAJXXXCA-AT/TR13

Packaging

Tape

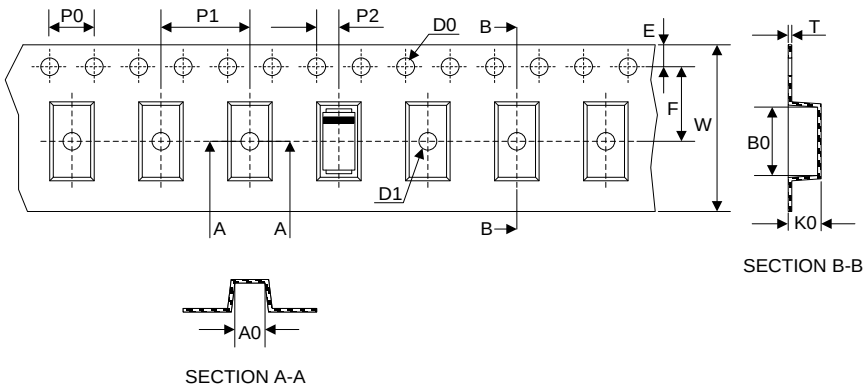

Symbol	Dimension (mm)
W	12.00±0.20
P0	4.00±0.10
P1	4.00±0.10
P2	2.00±0.10
D0	Φ1.5±0.10
D1	Φ1.5±0.10
E	1.75±0.10
F	5.50±0.05
A0	2.79±0.10
B0	5.33±0.10
K0	2.55±0.15
T	0.25±0.05

7” Reel

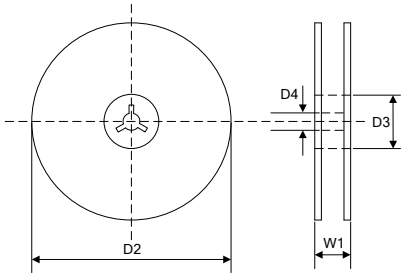

D2	Φ178.0±2.0
D3	Φ50.0Min.
D4	Φ13.0±0.5
W1	16.0±2.0
Quantity: 1000PCS	

13” Reel

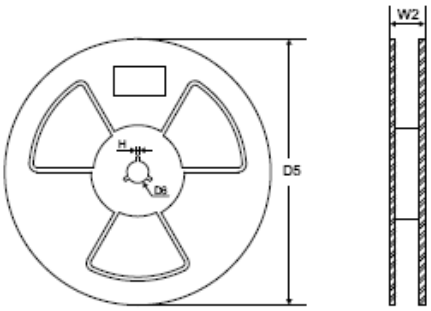

D5	Φ330.0±2.0
D6	Φ13.5±0.5
H	2.5±1.0
W2	16.0±2.0
Quantity: 5000PCS	

LEGAL DISCLAIMER

YAGEO, its distributors and agents (collectively, “YAGEO”), hereby disclaims any and all liabilities for any errors, inaccuracies or incompleteness contained in any product related information, including but not limited to product specifications, datasheets, pictures and/or graphics. YAGEO may make changes, modifications and/or improvements to product related information at any time and without notice.

YAGEO makes no representation, warranty, and/or guarantee about the fitness of its products for any particular purpose or the continuing production of any of its products. To the maximum extent permitted by law, YAGEO disclaims (i) any and all liability arising out of the application or use of any YAGEO product, (ii) any and all liability, including without limitation special, consequential or incidental damages, and (iii) any and all implied warranties, including warranties of fitness for a particular purpose, non-infringement and merchantability.

YAGEO products are designed for general purpose applications under normal operation and usage conditions. Please contact YAGEO for the applications listed below which require especially high reliability for the prevention of defects which might directly cause damage to the third party's life, body or property: Aerospace equipment (artificial satellite, rocket, etc.), Atomic energy-related equipment, Aviation equipment, Disaster prevention equipment, crime prevention equipment, Electric heating apparatus, burning equipment, Highly public information network equipment, data-processing equipment, Medical devices, Military equipment, Power generation control equipment, Safety equipment, Traffic signal equipment, Transportation equipment and Undersea equipment, or for any other application or use in which the failure of YAGEO products could result in personal injury or death, or serious property damage. Particularly **YAGEO Corporation and its affiliates do not recommend the use of commercial, automotive, and/or COTS grade products for high reliability applications or manned space flight.**

Information provided here is intended to indicate product specifications only. YAGEO reserves all the rights for revising this content without further notification, as long as products are unchanged. Any product change will be announced by PCN.