ON Semiconductor

Is Now

To learn more about onsemi™, please visit our website at
www.onsemi.com

onsemi and onsemi and other names, marks, and brands are registered and/or common law trademarks of Semiconductor Components Industries, LLC dba "**onsemi**" or its affiliates and/or subsidiaries in the United States and/or other countries. **onsemi** owns the rights to a number of patents, trademarks, copyrights, trade secrets, and other intellectual property. A listing of **onsemi** product/patent coverage may be accessed at www.onsemi.com/site/pdf/Patent-Marking.pdf. **onsemi** reserves the right to make changes at any time to any products or information herein, without notice. The information herein is provided "as-is" and **onsemi** makes no warranty, representation or guarantee regarding the accuracy of the information, product features, availability, functionality, or suitability of its products for any particular purpose, nor does **onsemi** assume any liability arising out of the application or use of any product or circuit, and specifically disclaims any and all liability, including without limitation special, consequential or incidental damages. Buyer is responsible for its products and applications using **onsemi** products, including compliance with all laws, regulations and safety requirements or standards, regardless of any support or applications information provided by **onsemi**. "Typical" parameters which may be provided in **onsemi** data sheets and/or specifications can and do vary in different applications and actual performance may vary over time. All operating parameters, including "Typicals" must be validated for each customer application by customer's technical experts. **onsemi** does not convey any license under any of its intellectual property rights nor the rights of others. **onsemi** products are not designed, intended, or authorized for use as a critical component in life support systems or any FDA Class 3 medical devices or medical devices with a same or similar classification in a foreign jurisdiction or any devices intended for implantation in the human body. Should Buyer purchase or use **onsemi** products for any such unintended or unauthorized application, Buyer shall indemnify and hold **onsemi** and its officers, employees, subsidiaries, affiliates, and distributors harmless against all claims, costs, damages, and expenses, and reasonable attorney fees arising out of, directly or indirectly, any claim of personal injury or death associated with such unintended or unauthorized use, even if such claim alleges that **onsemi** was negligent regarding the design or manufacture of the part. **onsemi** is an Equal Opportunity/Affirmative Action Employer. This literature is subject to all applicable copyright laws and is not for resale in any manner. Other names and brands may be claimed as the property of others.

Non-Inverting 3-State Buffer

NL17SZ125

The NL17SZ125 is a single non–inverting 3–state buffer in tiny footprint packages.

Features

- Designed for 1.65 V to 5.5 V V_{CC} Operation
- 2.3 ns t_{PD} at V_{CC} = 5 V (typ)
- Inputs/Outputs Overvoltage Tolerant up to 5.5 V
- I_{OFF} Supports Partial Power Down Protection
- Source/Sink 24 mA at 3.0 V
- Available in SC–88A, SC–74A, TSOP–5, SOT–553, SOT–953 and UDFN6 Packages
- Chip Complexity < 100 FETs
- NLV Prefix for Automotive and Other Applications Requiring Unique Site and Control Change Requirements; AEC–Q100 Qualified and PPAP Capable
- These Devices are Pb–Free, Halogen Free/BFR Free and are RoHS Compliant

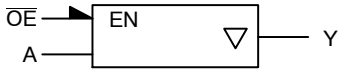

Figure 1. Logic Symbol

ON Semiconductor®

www.onsemi.com

MARKING DIAGRAMS

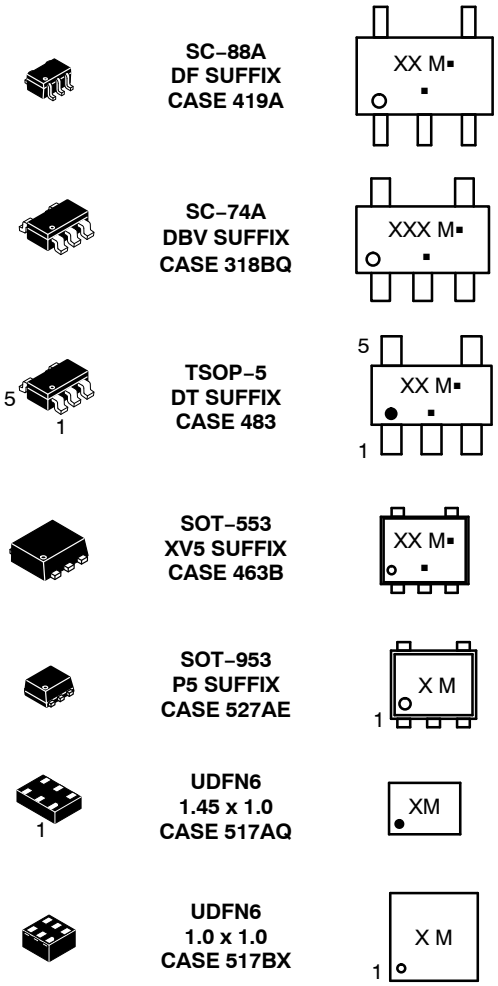

XX = Specific Device Code
M = Date Code*
▪ = Pb–Free Package

(Note: Microdot may be in either location)

*Date Code orientation and/or position may vary depending upon manufacturing location.

ORDERING INFORMATION

See detailed ordering, marking and shipping information in the package dimensions section on page 7 of this data sheet.

© Semiconductor Components Industries, LLC, 2015

September, 2020 – Rev. 21

Publication Order Number:
NL17SZ125/D

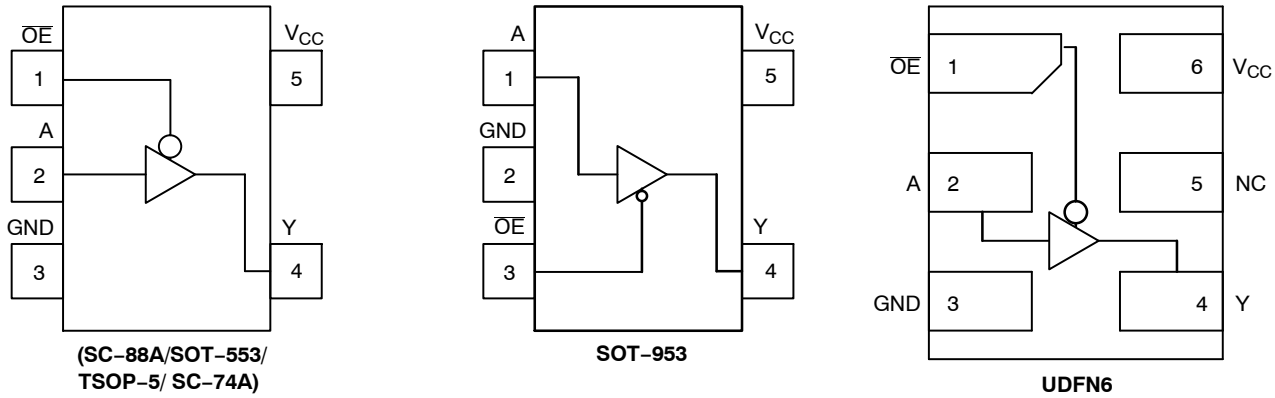

Figure 2. Pinout (Top View)

PIN ASSIGNMENT
(SC−88A/SOT−553/ TSOP−5/SC−74A)

Pin	Function
1	$\overline{OE}$
2	A
3	GND
4	Y
5	V_{CC}

PIN ASSIGNMENT (SOT−953)

Pin	Function
1	A
2	GND
3	$\overline{OE}$
4	Y
5	V_{CC}

PIN ASSIGNMENT (UDFN)

Pin	Function
1	$\overline{OE}$
2	A
3	GND
4	Y
5	NC
6	V_{CC}

FUNCTION TABLE

Input		Output
$\overline{OE}$	A	Y
L	L	L
L	H	H
H	X	Z

X = Don't Care

MAXIMUM RATINGS

Symbol	Characteristics		Value	Unit
V_{CC}	DC Supply Voltage	TSOP−5, SC−88A (NLV) SC−74A, SC−88A, SOT−953, SOT−553, UDFN6	−0.5 to +7.0 −0.5 to +6.5	V
V_{IN}	DC Input Voltage	TSOP−5, SC−88A (NLV) SC−74A, SC−88A, SOT−953, SOT−553, UDFN6	−0.5 to +7.0 −0.5 to +6.5	V
V_{OUT}	DC Output Voltage TSOP−5, SC−88A (NLV)	Active−Mode (High or Low State) Tri−State Mode (Note 1) Power−Down Mode (V_{CC} = 0 V)	−0.5 to V_{CC} + 0.5 −0.5 to +7.0 −0.5 to +7.0	V
	DC Output Voltage SC−74A, SC−88A, SOT−953, SOT−553, UDFN6	Active−Mode (High or Low State) Tri−State Mode (Note 1) Power−Down Mode (V_{CC} = 0 V)	−0.5 to V_{CC} + 0.5 −0.5 to +6.5 −0.5 to +6.5	V
I_{IK}	DC Input Diode Current	V_{IN} < GND	−50	mA
I_{OK}	DC Output Diode Current	V_{OUT} < GND	−50	mA
I_{OUT}	DC Output Source/Sink Current		±50	mA
I_{CC} or I_{GND}	DC Supply Current per Supply Pin or Ground Pin		±100	mA
T_{STG}	Storage Temperature Range		−65 to +150	°C
T_L	Lead Temperature, 1 mm from Case for 10 secs		260	°C
T_J	Junction Temperature Under Bias		+150	°C
θ_{JA}	Thermal Resistance (Note 2)	SC−88A SC−74A SOT−553 SOT−953 UDFN6	377 320 324 254 154	°C/W
P_D	Power Dissipation in Still Air	SC−88A SC−74A SOT−553 SOT−953 UDFN6	332 390 386 491 812	mW
MSL	Moisture Sensitivity		Level 1	–
F_R	Flammability Rating	Oxygen Index: 28 to 34	UL 94 V−0 @ 0.125 in	–
V_{ESD}	ESD Withstand Voltage (Note 3)	Human Body Model Charged Device Model	2000 1000	V
$I_{Latchup}$	Latchup Performance (Note 4)		± 100	mA

Stresses exceeding those listed in the Maximum Ratings table may damage the device. If any of these limits are exceeded, device functionality should not be assumed, damage may occur and reliability may be affected.

1. Applicable to devices with outputs that may be tri−stated.
2. Measured with minimum pad spacing on an FR4 board, using 10mm−by−1inch, 2 ounce copper trace no air flow per JESD51−7.
3. HBM tested to ANSI/ESDA/JEDEC JS−001−2017. CDM tested to EIA/JESD22−C101−F. JEDEC recommends that ESD qualification to EIA/JESD22−A115−A (Machine Model) be discontinued per JEDEC/JEP172A.
4. Tested to EIA/JESD78 Class II.

RECOMMENDED OPERATING CONDITIONS

Symbol	Characteristics		Min	Max	Unit
V_{CC}	Positive DC Supply Voltage		1.65	5.5	V
V_{IN}	DC Input Voltage		0	5.5	V
V_{OUT}	DC Output Voltage	Active−Mode (High or Low State) Tri−State Mode (Note 1) Power−Down Mode (V_{CC} = 0 V)	0 0 0	V_{CC} 5.5 5.5	
T_A	Operating Temperature Range		−55	+125	°C
t_r , t_f	Input Rise and Fall Time TSOP−5, SC−88A (NLV)	V_{CC} = 3.0 V to 3.6 V V_{CC} = 4.5 V to 5.5 V	0 0	100 20	ns/V
	Input Rise and Fall Time (SC−74A, SC−88A, SOT−953, SOT−553, UDFN6)	V_{CC} = 1.65 V to 1.95 V V_{CC} = 2.3 V to 2.7 V V_{CC} = 3.0 V to 3.6 V V_{CC} = 4.5 V to 5.5 V	0 0 0 0	20 20 10 5	

Functional operation above the stresses listed in the Recommended Operating Ranges is not implied. Extended exposure to stresses beyond the Recommended Operating Ranges limits may affect device reliability.

DC ELECTRICAL CHARACTERISTICS

Symbol	Parameter	Condition	V_{CC} (V)	T_A = 25°C			−55°C ≤ T_A ≤ 125°C		Units
				Min	Typ	Max	Min	Max	
V_{IH}	High−Level Input Voltage		1.65 to 1.95	0.65 V_{CC}	–	–	0.65 V_{CC}	–	V
			2.3 to 5.5	0.70 V_{CC}	–	–	0.70 V_{CC}	–	
V_{IL}	Low−Level Input Voltage		1.65 to 1.95	–	–	0.35 V_{CC}	–	0.35 V_{CC}	V
			2.3 to 5.5	–	–	0.30 V_{CC}	–	0.30 V_{CC}	
V_{OH}	High−Level Output Voltage	V_{IN} = V_{IH} or V_{IL} I_{OH} = −100 μA I_{OH} = −4 mA I_{OH} = −8 mA I_{OH} = −12 mA I_{OH} = −16 mA I_{OH} = −24 mA I_{OH} = −32 mA	 1.65 to 5.5 1.65 2.3 2.7 3.0 3.0 4.5	 V_{CC} − 0.1 1.29 1.9 2.2 2.4 2.3 3.8	 V_{CC} 1.4 2.1 2.4 2.7 2.5 4.0	 – – – – – – –	 V_{CC} − 0.1 1.29 1.9 2.2 2.4 2.3 3.8	 – – – – – – –	V
V_{OL}	Low−Level Output Voltage	V_{IN} = V_{IH} or V_{IL} I_{OL} = 100 μA I_{OL} = 4 mA I_{OL} = 8 mA I_{OL} = 12 mA I_{OL} = 16 mA I_{OL} = 24 mA I_{OL} = 32 mA	 1.65 to 5.5 1.65 2.3 2.7 3.0 3.0 4.5	 – – – – – – –	 0.08 0.2 0.22 0.28 0.38 0.42	 0.1 0.24 0.3 0.4 0.4 0.55 0.55	 – – – – – – –	 0.1 0.24 0.3 0.4 0.4 0.55 0.55	V
I_{IN}	Input Leakage Current	V_{IN} = 5.5 V or GND	1.65 to 5.5	–	–	±0.1	–	±1.0	μA
I_{OZ}	3−State Output Leakage Current	V_{OUT} = 0 V to 5.5 V	1.65 to 5.5	–	–	±0.5	–	±5.0	μA
I_{OFF}	Power Off Leakage Current	V_{IN} = 5.5 V or V_{OUT} = 5.5 V	0	–	–	1.0	–	10	μA
I_{CC}	Quiescent Supply Current	V_{IN} = V_{CC} or GND	5.5	–	–	1.0	–	10	μA

Product parametric performance is indicated in the Electrical Characteristics for the listed test conditions, unless otherwise noted. Product performance may not be indicated by the Electrical Characteristics if operated under different conditions.

AC ELECTRICAL CHARACTERISTICS

Symbol	Parameter	Condition	V_{CC} (V)	T_A = 25°C			−55°C ≤ T_A ≤ 125°C		Units
				Min	Typ	Max	Min	Max	
t_{PLH}, t_{PHL}	Propagation Delay, A to Y (Figures 3 and 4)	R_L = 1 MΩ, C_L = 15 pF	1.65 to 1.95	–	6.0	10	–	10.5	ns
		R_L = 1 MΩ, C_L = 15 pF	2.3 to 2.7	–	3.4	7.5	–	8.0	
		R_L = 1 MΩ, C_L = 15 pF	3.0 to 3.6	–	2.5	5.2	–	5.5	
		R_L = 500 Ω, C_L = 50 pF		–	2.9	5.7	–	6.0	
		R_L = 1 MΩ, C_L = 15 pF	4.5 to 5.5	–	2.0	4.5	–	4.8	
		R_L = 500 Ω, C_L = 50 pF		–	2.3	5.0	–	5.3	
t_{PZH}, t_{PZL}	Output Enable Time, $\overline{OE}$ to Y (Figures 3 and 4)		1.65 to 1.95	–	6.5	9.5	–	10	ns
			2.3 to 2.7	–	3.6	8.5	–	9.0	
			3.0 to 3.6	–	2.8	6.2	–	6.5	
			4.5 to 5.5	–	2.0	5.5	–	5.8	
t_{PHZ}, t_{PLZ}	Output Disable Time, $\overline{OE}$ to Y (Figures 3 and 4)		1.65 to 1.95	–	5.0	10	–	10.5	ns
			2.3 to 2.7	–	3.3	8.0	–	8.5	
			3.0 to 3.6	–	2.7	5.7	–	6.0	
			4.5 to 5.5		2.6	4.7	–	5.0	

CAPACITIVE CHARACTERISTICS

Symbol	Parameter	Condition	Typical	Units
C_{IN}	Input Capacitance	V_{CC} = 5.5 V, V_{IN} = 0 V or V_{CC}	2.5	pF
C_{OUT}	Output Capacitance	V_{CC} = 5.5 V, V_{IN} = 0 V or V_{CC}	2.5	pF
C_{PD}	Power Dissipation Capacitance (Note 5)	10 MHz, V_{CC} = 3.3 V, V_{IN} = 0 V or V_{CC} 10 MHz, V_{CC} = 5.5 V, V_{IN} = 0 V or V_{CC}	9 11	pF

5. C_{PD} is defined as the value of the internal equivalent capacitance which is calculated from the operating current consumption without load. Average operating current can be obtained by the equation: $I_{CC(OPR)} = C_{PD} \bullet V_{CC} \bullet f_{in} + I_{CC}$. C_{PD} is used to determine the no−load dynamic power consumption; $P_D = C_{PD} \bullet V_{CC}^2 \bullet f_{in} + I_{CC} \bullet V_{CC}$.

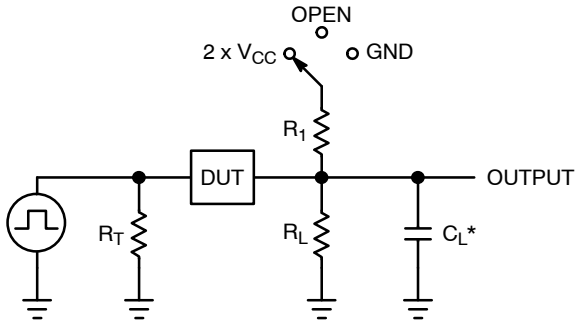

C_L includes probe and jig capacitance
R_T is Z_{OUT} of pulse generator (typically 50 Ω)
f = 1 MHz

Figure 3. Test Circuit

Test	Switch Position	C_L, pF	R_L, Ω	R_1, Ω
t_{PLH} / t_{PHL}	Open	See AC Characteristics Table		
t_{PLZ} / t_{PZL}	2 x V_{CC}	50	500	500
t_{PHZ} / t_{PZH}	GND	50	500	500

X = Don't Care

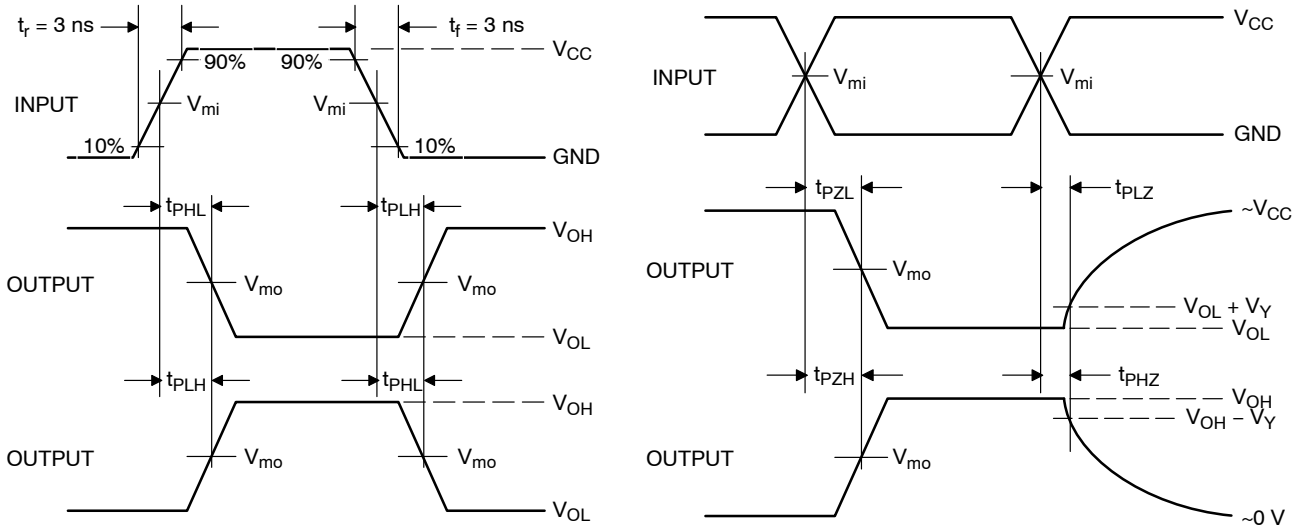

Figure 4. Switching Waveforms

V_{CC}, V	V_{mi}, V	V_{mo}, V		V_Y, V
		t_{PLH}, t_{PHL}	t_{PZL}, t_{PLZ}, t_{PZH}, t_{PHZ}	
1.65 to 1.95	$V_{CC}/2$	$V_{CC}/2$	$V_{CC}/2$	0.15
2.3 to 2.7	$V_{CC}/2$	$V_{CC}/2$	$V_{CC}/2$	0.15
3.0 to 3.6	$V_{CC}/2$	$V_{CC}/2$	$V_{CC}/2$	0.3
4.5 to 5.5	$V_{CC}/2$	$V_{CC}/2$	$V_{CC}/2$	0.3

DEVICE ORDERING INFORMATION

Device	Packages	Specific Device Code	Pin 1 Orientation (See below)	Shipping†
NL17SZ125DFT2G	SC−88A	M0	Q4	3000 / Tape & Reel
NLV17SZ125DFT2G*	SC−88A	M0	Q4	3000 / Tape & Reel
NL17SZ125DBVT1G	SC−74A	M0	Q4	3000 / Tape & Reel
NL17SZ125DTT1G	TSOP−5	M0	Q4	3000 / Tape & Reel
NL17SZ125XV5T2G	SOT−553	M0	Q4	4000 / Tape & Reel
NL17SZ125P5T5G	SOT−953	Q (Rotated 180° CW)	Q2	8000 / Tape & Reel
NL17SZ125MU1TCG (In Development)	UDFN6, 1.45 x 1.0, 0.5P	TBD	Q4	3000 / Tape & Reel
NL17SZ125MU3TCG	UDFN6, 1.0 x 1.0, 0.35P	A	Q4	3000 / Tape & Reel

†For information on tape and reel specifications, including part orientation and tape sizes, please refer to our Tape and Reel Packaging Specifications Brochure, BRD8011/D.

*NLV Prefix for Automotive and Other Applications Requiring Unique Site and Control Change Requirements; AEC−Q100 Qualified and PPAP Capable.

Pin 1 Orientation in Tape and Reel

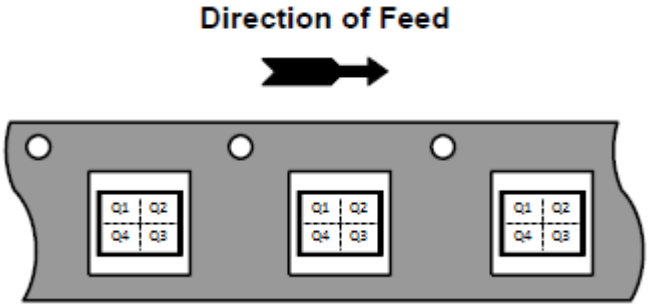

PACKAGE DIMENSIONS

SC−88A (SC−70−5/SOT−353)
CASE 419A−02
ISSUE L

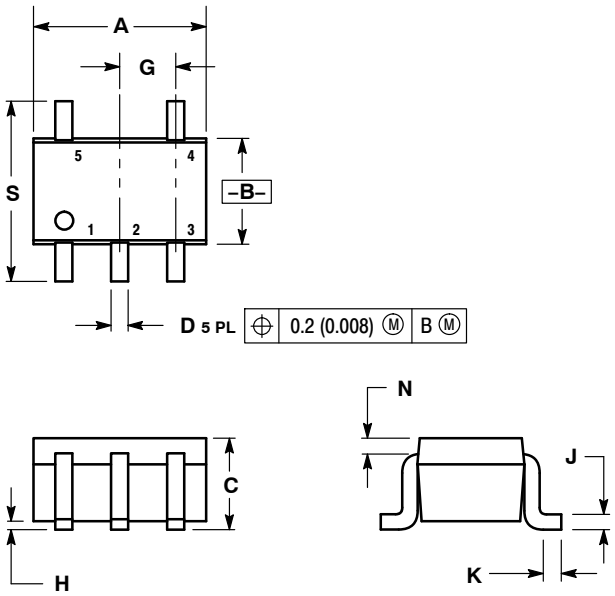

NOTES:
1. DIMENSIONING AND TOLERANCING PER ANSI Y14.5M, 1982.
2. CONTROLLING DIMENSION: INCH.
3. 419A−01 OBSOLETE. NEW STANDARD 419A−02.
4. DIMENSIONS A AND B DO NOT INCLUDE MOLD FLASH, PROTRUSIONS, OR GATE BURRS.

	INCHES		MILLIMETERS	
DIM	MIN	MAX	MIN	MAX
A	0.071	0.087	1.80	2.20
B	0.045	0.053	1.15	1.35
C	0.031	0.043	0.80	1.10
D	0.004	0.012	0.10	0.30
G	0.026 BSC		0.65 BSC	
H	---	0.004	---	0.10
J	0.004	0.010	0.10	0.25
K	0.004	0.012	0.10	0.30
N	0.008 REF		0.20 REF	
S	0.079	0.087	2.00	2.20

SOLDER FOOTPRINT*

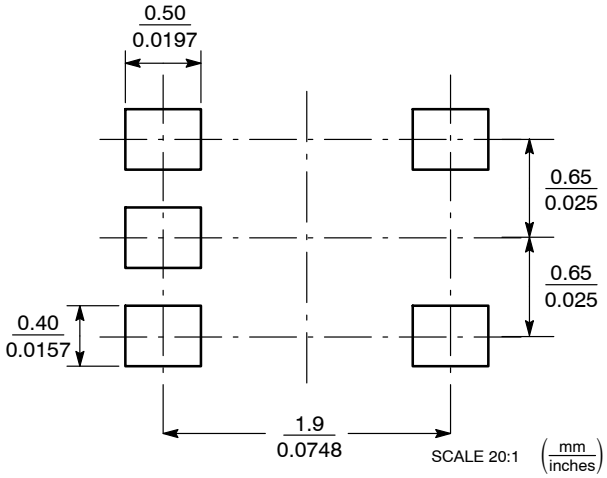

*For additional information on our Pb−Free strategy and soldering details, please download the ON Semiconductor Soldering and Mounting Techniques Reference Manual, SOLDERRM/D.

PACKAGE DIMENSIONS

SC−74A
CASE 318BQ
ISSUE B

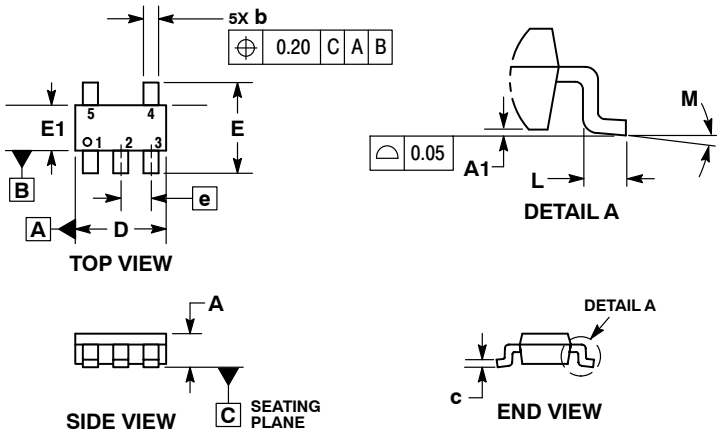

NOTES:
1. DIMENSIONING AND TOLERANCING PER ASME Y14.5M, 1994.
2. CONTROLLING DIMENSION: MILLIMETERS.
3. MAXIMUM LEAD THICKNESS INCLUDES LEAD FINISH THICKNESS. MINIMUM LEAD THICKNESS IS THE MINIMUM THICKNESS OF BASE MATERIAL.
4. DIMENSIONS A AND B DO NOT INCLUDE MOLD FLASH, PROTRUSIONS, OR GATE BURRS. MOLD FLASH, PROTRUSIONS, OR GATE BURRS SHALL NOT EXCEED 0.15 PER SIDE.

	MILLIMETERS	
DIM	MIN	MAX
A	0.90	1.10
A1	0.01	0.10
b	0.25	0.50
c	0.10	0.26
D	2.85	3.15
E	2.50	3.00
E1	1.35	1.65
e	0.95 BSC	
L	0.20	0.60
M	0 °	10 °

RECOMMENDED SOLDERING FOOTPRINT*

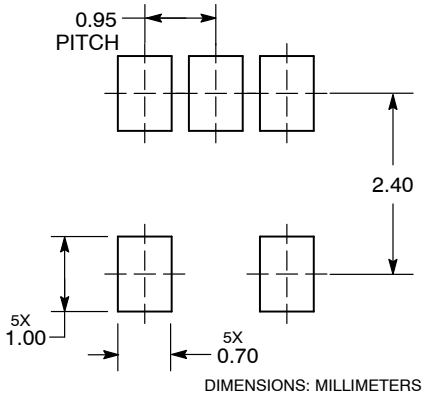

*For additional information on our Pb−Free strategy and soldering details, please download the ON Semiconductor Soldering and Mounting Techniques Reference Manual, SOLDERRM/D.

PACKAGE DIMENSIONS

TSOP−5
CASE 483−02
ISSUE M

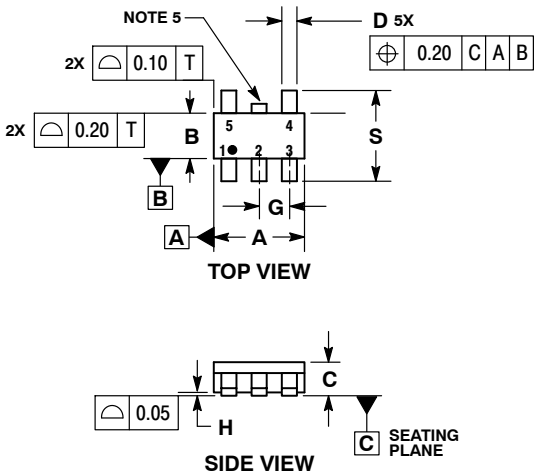

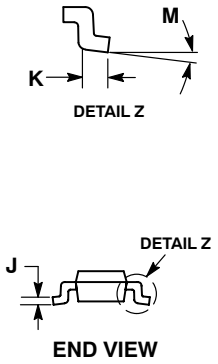

NOTES:
1. DIMENSIONING AND TOLERANCING PER ASME Y14.5M, 1994.
2. CONTROLLING DIMENSION: MILLIMETERS.
3. MAXIMUM LEAD THICKNESS INCLUDES LEAD FINISH THICKNESS. MINIMUM LEAD THICKNESS IS THE MINIMUM THICKNESS OF BASE MATERIAL.
4. DIMENSIONS A AND B DO NOT INCLUDE MOLD FLASH, PROTRUSIONS, OR GATE BURRS. MOLD FLASH, PROTRUSIONS, OR GATE BURRS SHALL NOT EXCEED 0.15 PER SIDE. DIMENSION A.
5. OPTIONAL CONSTRUCTION: AN ADDITIONAL TRIMMED LEAD IS ALLOWED IN THIS LOCATION. TRIMMED LEAD NOT TO EXTEND MORE THAN 0.2 FROM BODY.

	MILLIMETERS	
DIM	MIN	MAX
A	2.85	3.15
B	1.35	1.65
C	0.90	1.10
D	0.25	0.50
G	0.95 BSC	
H	0.01	0.10
J	0.10	0.26
K	0.20	0.60
M	0 °	10 °
S	2.50	3.00

SOLDERING FOOTPRINT*

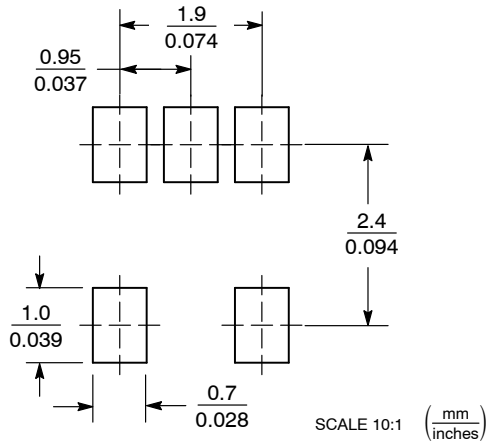

*For additional information on our Pb−Free strategy and soldering details, please download the ON Semiconductor Soldering and Mounting Techniques Reference Manual, SOLDERRM/D.

PACKAGE DIMENSIONS

SOT−553, 5 LEAD
CASE 463B
ISSUE C

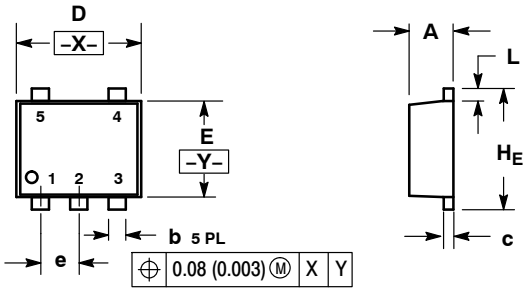

NOTES:
1. DIMENSIONING AND TOLERANCING PER ANSI Y14.5M, 1982.
2. CONTROLLING DIMENSION: MILLIMETERS
3. MAXIMUM LEAD THICKNESS INCLUDES LEAD FINISH THICKNESS. MINIMUM LEAD THICKNESS IS THE MINIMUM THICKNESS OF BASE MATERIAL.

	MILLIMETERS			INCHES		
DIM	MIN	NOM	MAX	MIN	NOM	MAX
A	0.50	0.55	0.60	0.020	0.022	0.024
b	0.17	0.22	0.27	0.007	0.009	0.011
c	0.08	0.13	0.18	0.003	0.005	0.007
D	1.55	1.60	1.65	0.061	0.063	0.065
E	1.15	1.20	1.25	0.045	0.047	0.049
e	0.50 BSC			0.020 BSC		
L	0.10	0.20	0.30	0.004	0.008	0.012
H_E	1.55	1.60	1.65	0.061	0.063	0.065

SOLDERING FOOTPRINT*

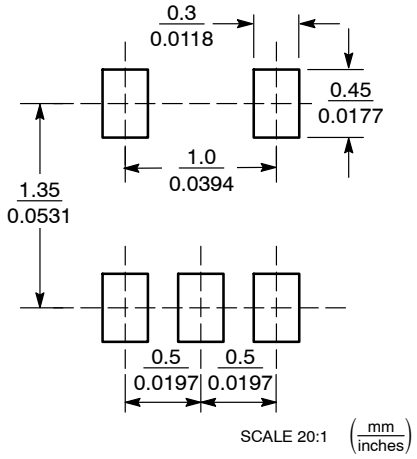

*For additional information on our Pb−Free strategy and soldering details, please download the ON Semiconductor Soldering and Mounting Techniques Reference Manual, SOLDERRM/D.

PACKAGE DIMENSIONS

SOT−953
CASE 527AE
ISSUE E

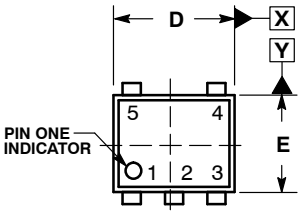

TOP VIEW

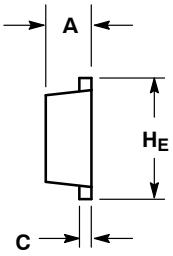

SIDE VIEW

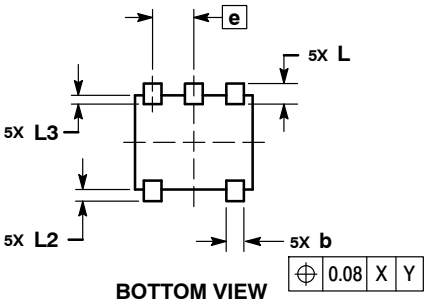

BOTTOM VIEW

NOTES:
1. DIMENSIONING AND TOLERANCING PER ASME Y14.5M, 1994.
2. CONTROLLING DIMENSION: MILLIMETERS
3. MAXIMUM LEAD THICKNESS INCLUDES LEAD FINISH. MINIMUM LEAD THICKNESS IS THE MINIMUM THICKNESS OF THE BASE MATERIAL.
4. DIMENSIONS D AND E DO NOT INCLUDE MOLD FLASH, PROTRUSIONS, OR GATE BURRS.

	MILLIMETERS		
DIM	MIN	NOM	MAX
A	0.34	0.37	0.40
b	0.10	0.15	0.20
C	0.07	0.12	0.17
D	0.95	1.00	1.05
E	0.75	0.80	0.85
e	0.35 BSC		
H_E	0.95	1.00	1.05
L	0.175 REF		
L2	0.05	0.10	0.15
L3	−−−	−−−	0.15

SOLDERING FOOTPRINT*

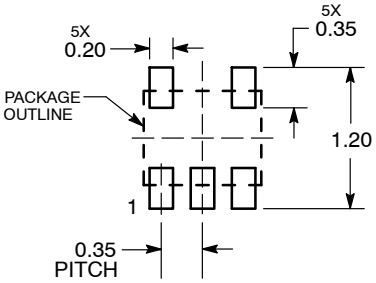

DIMENSIONS: MILLIMETERS

*For additional information on our Pb−Free strategy and soldering details, please download the ON Semiconductor Soldering and Mounting Techniques Reference Manual, SOLDERRM/D.

PACKAGE DIMENSIONS

UDFN6, 1.45x1.0, 0.5P
CASE 517AQ
ISSUE O

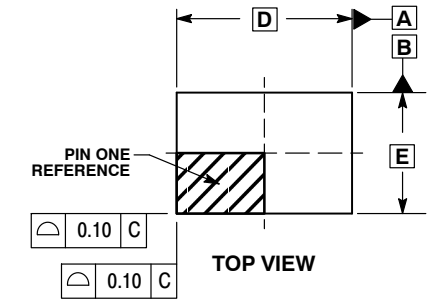

TOP VIEW

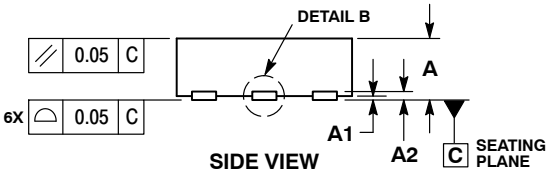

SIDE VIEW

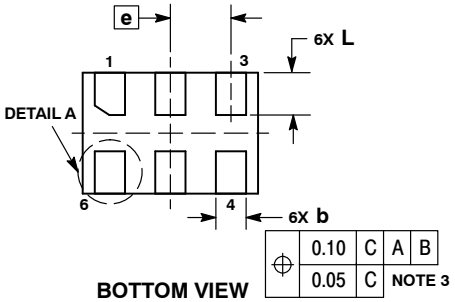

BOTTOM VIEW

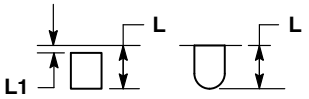

DETAIL A
OPTIONAL CONSTRUCTIONS

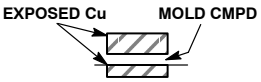

DETAIL B
OPTIONAL CONSTRUCTIONS

NOTES:
1. DIMENSIONING AND TOLERANCING PER ASME Y14.5M, 1994.
2. CONTROLLING DIMENSION: MILLIMETERS.
3. DIMENSION b APPLIES TO PLATED TERMINAL AND IS MEASURED BETWEEN 0.15 AND 0.30 mm FROM THE TERMINAL TIP.

	MILLIMETERS	
DIM	MIN	MAX
A	0.45	0.55
A1	0.00	0.05
A2	0.07 REF	
b	0.20	0.30
D	1.45 BSC	
E	1.00 BSC	
e	0.50 BSC	
L	0.30	0.40
L1	---	0.15

MOUNTING FOOTPRINT

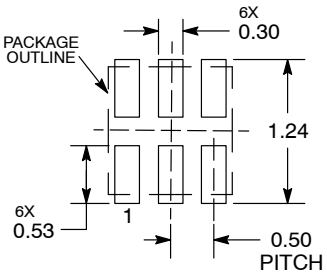

DIMENSIONS: MILLIMETERS

*For additional information on our Pb−Free strategy and soldering details, please download the ON Semiconductor Soldering and Mounting Techniques Reference Manual, SOLDERRM/D.

PACKAGE DIMENSIONS

UDFN6, 1x1, 0.35P
CASE 517BX
ISSUE O

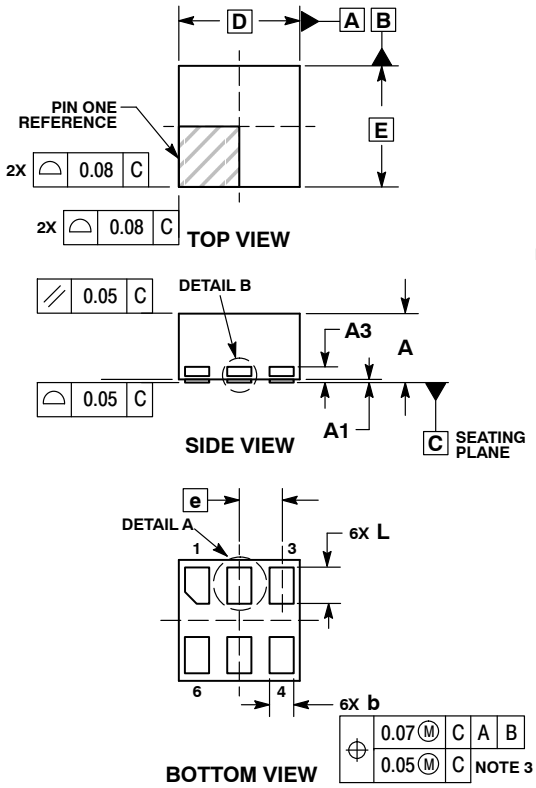

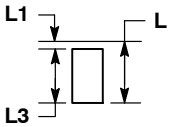

DETAIL A
ALTERNATE TERMINAL CONSTRUCTION

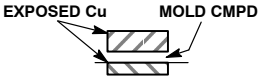

DETAIL B
ALTERNATE CONSTRUCTION

NOTES:
1. DIMENSIONING AND TOLERANCING PER ASME Y14.5M, 1994.
2. CONTROLLING DIMENSION: MILLIMETERS.
3. DIMENSION b APPLIES TO PLATED TERMINAL AND IS MEASURED BETWEEN 0.15 AND 0.20 MM FROM TERMINAL TIP.
4. PACKAGE DIMENSIONS EXCLUSIVE OF BURRS AND MOLD FLASH.

	MILLIMETERS	
DIM	MIN	MAX
A	0.50	0.65
A1	0.00	0.05
A3	0.13 REF	
b	0.17	0.23
D	1.00 BSC	
E	1.00 BSC	
e	0.35	
L	0.20	0.40
L1	---	0.15
L3	0.26	0.33

RECOMMENDED SOLDERING FOOTPRINT*

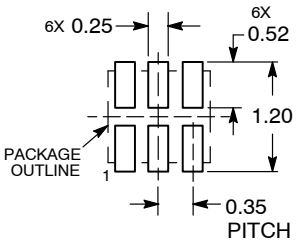

DIMENSION: MILLIMETERS

*For additional information on our Pb−Free strategy and soldering details, please download the ON Semiconductor Soldering and Mounting Techniques Reference Manual, SOLDERRM/D.

ON Semiconductor and ON are trademarks of Semiconductor Components Industries, LLC dba ON Semiconductor or its subsidiaries in the United States and/or other countries. ON Semiconductor owns the rights to a number of patents, trademarks, copyrights, trade secrets, and other intellectual property. A listing of ON Semiconductor's product/patent coverage may be accessed at www.onsemi.com/site/pdf/Patent−Marking.pdf. ON Semiconductor reserves the right to make changes without further notice to any products herein. ON Semiconductor makes no warranty, representation or guarantee regarding the suitability of its products for any particular purpose, nor does ON Semiconductor assume any liability arising out of the application or use of any product or circuit, and specifically disclaims any and all liability, including without limitation special, consequential or incidental damages. Buyer is responsible for its products and applications using ON Semiconductor products, including compliance with all laws, regulations and safety requirements or standards, regardless of any support or applications information provided by ON Semiconductor. "Typical" parameters which may be provided in ON Semiconductor data sheets and/or specifications can and do vary in different applications and actual performance may vary over time. All operating parameters, including "Typicals" must be validated for each customer application by customer's technical experts. ON Semiconductor does not convey any license under its patent rights nor the rights of others. ON Semiconductor products are not designed, intended, or authorized for use as a critical component in life support systems or any FDA Class 3 medical devices or medical devices with a same or similar classification in a foreign jurisdiction or any devices intended for implantation in the human body. Should Buyer purchase or use ON Semiconductor products for any such unintended or unauthorized application, Buyer shall indemnify and hold ON Semiconductor and its officers, employees, subsidiaries, affiliates, and distributors harmless against all claims, costs, damages, and expenses, and reasonable attorney fees arising out of, directly or indirectly, any claim of personal injury or death associated with such unintended or unauthorized use, even if such claim alleges that ON Semiconductor was negligent regarding the design or manufacture of the part. ON Semiconductor is an Equal Opportunity/Affirmative Action Employer. This literature is subject to all applicable copyright laws and is not for resale in any manner.

PUBLICATION ORDERING INFORMATION

LITERATURE FULFILLMENT:
Email Requests to: orderlit@onsemi.com

ON Semiconductor Website: www.onsemi.com

TECHNICAL SUPPORT
North American Technical Support:
Voice Mail: 1 800−282−9855 Toll Free USA/Canada
Phone: 011 421 33 790 2910

Europe, Middle East and Africa Technical Support:
Phone: 00421 33 790 2910
For additional information, please contact your local Sales Representative

◊

Mouser Electronics

Authorized Distributor

Click to View Pricing, Inventory, Delivery & Lifecycle Information:

onsemi:
NL17SZ125DFT2 NL17SZ125DFT2G NL17SZ125XV5T2G NLV17SZ125DFT2G NL17SZ125DTT1G
NLV17SZ125DFT1G NL17SZ125P5T5G NL17SZ125CMUTCG NL17SZ125DBVT1G NL17SZ125MU3TCG