BGA524N6

Silicon Germanium Low Noise Amplifier
for Global Navigation Satellite Systems (GNSS)

Data Sheet

Revision 3.5, 2021-08-31

RF & Protection Devices

Edition 2021-08-31

Published by
Infineon Technologies AG
81726 Munich, Germany

© 2021 Infineon Technologies AG
All Rights Reserved.

Legal Disclaimer

The information given in this document shall in no event be regarded as a guarantee of conditions or characteristics. With respect to any examples or hints given herein, any typical values stated herein and/or any information regarding the application of the device, Infineon Technologies hereby disclaims any and all warranties and liabilities of any kind, including without limitation, warranties of non-infringement of intellectual property rights of any third party.

Information

For further information on technology, delivery terms and conditions and prices, please contact the nearest Infineon Technologies Office (**www.infineon.com**).

Warnings

Due to technical requirements, components may contain dangerous substances. For information on the types in question, please contact the nearest Infineon Technologies Office.

Infineon Technologies components may be used in life-support devices or systems only with the express written approval of Infineon Technologies, if a failure of such components can reasonably be expected to cause the failure of that life-support device or system or to affect the safety or effectiveness of that device or system. Life support devices or systems are intended to be implanted in the human body or to support and/or maintain and sustain and/or protect human life. If they fail, it is reasonable to assume that the health of the user or other persons may be endangered.

Revision History	
Page or Item	**Subjects (major changes since previous revision)**
Revision 3.5, 2021-08-31	
17	Carrier Tape Drawing updated
Revision 3.4, 2020-07-01	
7	Type code information updated
15	Type code information updated
Revision 3.3, 2018-04-10	
3	Trademarks updated
7, 12	Package name TSNP-6-10 added
9	Maximum ratings comment updated
14	Package outline drawing for TSNP-6-10 added
15	Marking layout drawing for TSNP-6-10 added
16	Date code marking table added
17	Tape & reel dimensions for TSNP-6-10 added
Revision 3.2, 2014-10-15	
11-12	Footnotes 3 and 5 added

Other Trademarks

All referenced product or service names and trademarks are the property of their respective owners.

Table of Contents

Table of Contents 4
List of Figures 5
List of Tables 6
Features 7
1 Maximum Ratings 9
2 Electrical Characteristics 10
3 Application Information 12
4 Package Information 14

List of Figures

Figure 1 Block Diagram 7
Figure 2 Application Schematic BGA524N6 12
Figure 3 Drawing of Application Board 13
Figure 4 Application Board Cross-Section 13
Figure 5 TSNP-6-2 Package Outline (top, side and bottom views) 14
Figure 6 TSNP-6-10 Package Outline (top, side and bottom views) 14
Figure 7 Footprint Recommendation TSNP-6-2 and TSNP-6-10 15
Figure 8 Marking Layout TSNP-6-2 (top view) 15
Figure 9 Marking Layout TSNP-6-10 (top view) 15
Figure 10 Date Code Marking TSNP-6-2 and TSNP-6-10 16
Figure 11 Tape & Reel Dimensions TSNP-6-2 (reel diameter 180 mm, pieces/reel 15000) 16
Figure 12 Tape & Reel Dimensions TSNP-6-10 (reel diameter 180 mm, pieces/reel 12000) 17

List of Tables

Table 1 Pin Definition and Function 8
Table 2 Maximum Ratings 9
Table 3 Thermal Resistance 9
Table 4 Electrical Characteristics: T_A = 25 °C, V_{CC} = 1.8 V, $V_{PON,ON}$ = 1.8 V, $V_{PON,OFF}$ = 0 V, f = 1550 - 1615 MHz (GPS / Glonass / Beidou / Galileo) 10
Table 5 Electrical Characteristics: T_A = 25 °C, V_{CC} = 2.8 V, $V_{PON,ON}$ = 2.8 V, $V_{PON,OFF}$ = 0 V, f = 1550 - 1615 MHz (GPS / Glonass / Beidou / Galileo) 11
Table 6 Bill of Materials 12

Silicon Germanium Low Noise Amplifier
for Global Navigation Satellite Systems (GNSS) **BGA524N6**

Features

- High insertion power gain: 19.6 dB
- Out-of-band input 3rd order intercept point: -4dBm
- Input 1 dB compression point: -12 dBm
- Low noise figure: 0.55 dB
- Very low current consumption: 2.5 mA
- Operating frequencies: 1550 - 1615 MHz
- Supply voltage: 1.5 V to 3.3 V
- Digital on/off switch (1V logic high level)
- Ultra small TSNP-6-2 / TSNP-6-10 leadless package (footprint: 0.7 x 1.1 mm^2)
- B7HF Silicon Germanium technology
- RF output internally matched to 50 Ω
- Only 1 external SMD component necessary
- 2kV HBM ESD protection (including AI-pin)
- Pb-free (RoHS compliant) package

RoHS

Application

- Ideal for all Global Navigation Satellite Systems (GNSS) like GPS, GLONASS, Beidou, Galileo and others

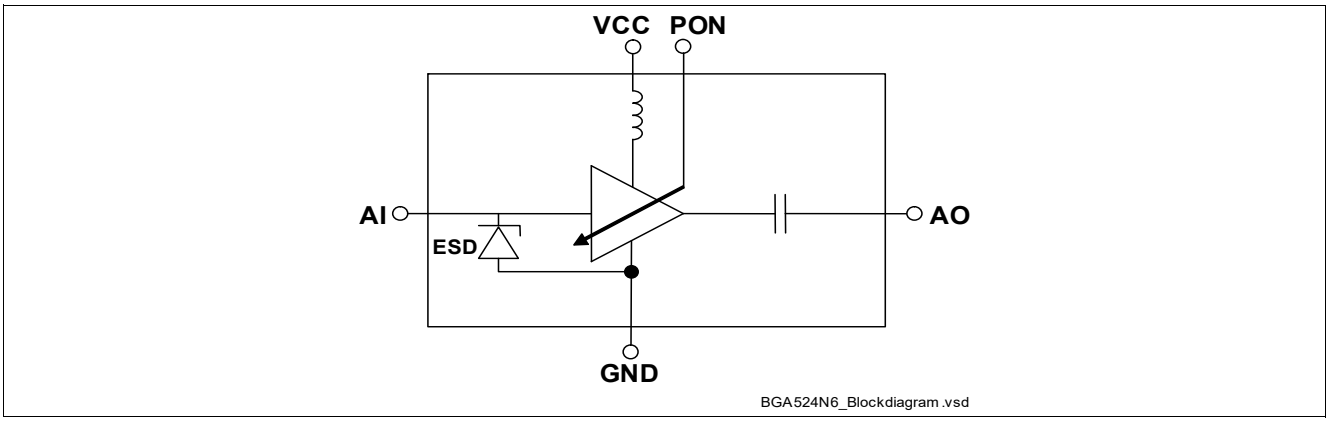

Figure 1 Block Diagram

Product Name	Marking / Type Code	Package
BGA524N6	H	TSNP-6-2 / TSNP-6-10

Description

The BGA524N6 is a front-end low noise amplifier for Global Navigation Satellite Systems (GNSS) from 1550 MHz to 1615 MHz like GPS, GLONASS, Beidou, Galileo and others. The LNA provides 19.6 dB gain and 0.55 dB noise figure at a current consumption of 2.5 mA in the application configuration described in **Chapter 3**. The BGA524N6 is based upon Infineon Technologies‘ B7HF Silicon Germanium technology. It operates from 1.5 V to 3.3 V supply voltage.

Pin Definition and Function

Table 1 Pin Definition and Function

Pin No.	Name	Function
1	GND	Ground
2	VCC	DC supply
3	AO	LNA output
4	GND	Ground
5	AI	LNA input
6	PON	Power on control

1 Maximum Ratings

Table 2 Maximum Ratings

Parameter	Symbol	Values			Unit	Note / Test Condition
		Min.	Typ.	Max.		
Voltage at pin VCC	V_{CC}	-0.3	–	3.6	V	1)
Voltage at pin AI	V_{AI}	-0.3	–	0.9	V	–
Voltage at pin AO	V_{AO}	-0.3	–	V_{CC} + 0.3	V	–
Voltage at pin PON	V_{PON}	-0.3	–	V_{CC} + 0.3	V	–
Voltage at pin GNDRF	V_{GNDRF}	-0.3	–	0.3	V	–
Current into pin VCC	I_{CC}	–	–	16	mA	–
RF input power	P_{IN}	–	–	0	dBm	–
Total power dissipation, T_S < 148 °C[2)]	P_{tot}	–	–	60	mW	–
Junction temperature	T_J	–	–	150	°C	–
Ambient temperature range	T_A	-40	–	85	°C	–
Storage temperature range	T_{STG}	-65	–	150	°C	–
ESD capability all pins	V_{ESD_HBM}	–	–	2000	V	according to JESD22A-114

1) All voltages refer to GND-Node unless otherwise noted

2) T_S is measured on the ground lead at the soldering point

Attention: Stresses above the max. values listed here may cause permanent damage to the device. Maximum ratings are absolute ratings; exceeding only one of these values may cause irreversible damage to the integrated circuit. Exposure to conditions at or below absolute maximum rating but above the specified maximum operation conditions may affect device reliability and life time. Functionality of the device might not be given under these conditions.

Thermal Resistance

Table 3 Thermal Resistance

Parameter	Symbol	Value	Unit
Junction - soldering point[1)]	R_{thJS}	25	K/W

1) For calculation of R_{thJA} please refer to Application Note Thermal Resistance

2 Electrical Characteristics

Table 4 Electrical Characteristics:[1)] T_A = 25 °C, V_{CC} = 1.8 V, $V_{PON,ON}$ = 1.8 V, $V_{PON,OFF}$ = 0 V, f = 1550 - 1615 MHz (GPS / Glonass / Beidou / Galileo)

Parameter	Symbol	Values			Unit	Note / Test Condition
		Min.	Typ.	Max.		
Supply voltage	V_{CC}	1.5	–	3.3	V	–
Supply current	I_{CC}	–	2.5	3.2	mA	ON-mode
		–	2.5	3.5 [5)]	mA	ON-mode, f_{IN} = 1575 MHz, P_{IN} ≤ -40dBm
		–	0.2	3	µA	OFF-mode
Power On voltage	V_{pon}	1.0	–	Vcc	V	ON-mode
		0	–	0.4	V	OFF-mode
Power On current	I_{pon}	–	5	10	µA	ON-mode
		–	–	1	µA	OFF-mode
Insertion power gain	$\|S_{21}\|^2$	18.4	19.6	20.8	dB	–
Noise figure[2)]	NF	–	0.55	1.0	dB	Z_S = 50 Ω
Input return loss[3)]	RL_{in}	8	11	–	dB	–
Output return loss[3)]	RL_{out}	12	20	–	dB	–
Reverse isolation[3)]	$1/\|S_{12}\|^2$	32	37	–	dB	–
Power gain settling time[4),5)]	t_S	–	5	8	µs	OFF- to ON-mode
		–	5	8	µs	ON- to OFF-mode
Inband input 1dB-compression point[3)]	IP_{1dB}	-19	-16	–	dBm	–
Inband input 3rd-order intercept point[6),3)]	IIP_3	-12	-9	–	dBm	f_1 = 1575 MHz f_2 = f_1 +/-1 MHz
Out-of-band input 3rd-order intercept point[7),5)]	IIP_{3oob}	-8	-5	–	dBm	f_1 = 1712.7 MHz f_2 = 1850 MHz
Stability[5)]	k	> 2	> 3	–		f = 20 MHz ... 10 GHz

1) Based on the application described in chapter 3
2) PCB losses are subtracted
3) Verification based on AQL; not 100% tested in production
4) To be within 1 dB of the final gain OFF- to ON-mode; to be within 3 dB of the final gain ON- to OFF-mode
5) Guaranteed by device design; not tested in production
6) Input power = -30 dBm for each tone
7) Input power = -20 dBm for each tone

Table 5 Electrical Characteristics:[1)] T_A = 25 °C, V_{CC} = 2.8 V, $V_{PON,ON}$ = 2.8 V, $V_{PON,OFF}$ = 0 V, f = 1550 - 1615 MHz (GPS / Glonass / Beidou / Galileo)

Parameter	Symbol	Values			Unit	Note / Test Condition
		Min.	Typ.	Max.		
Supply voltage	V_{CC}	1.5	–	3.3	V	–
Supply current	I_{CC}	–	2.6	3.3	mA	ON-mode
		–	2.6	3.6 [5)]	mA	ON-mode, f_{IN} = 1575 MHz, P_{IN} ≤ -40dBm
		–	0.2	3	µA	OFF-mode
Power On voltage	V_{pon}	1.0	–	Vcc	V	ON-mode
		0	–	0.4	V	OFF-mode
Power On current	I_{pon}	–	10	15	µA	ON-mode
		–	–	1	µA	OFF-mode
Insertion power gain	$\|S_{21}\|^2$	18.4	19.6	20.8	dB	–
Noise figure[2)]	NF	–	0.55	1.0	dB	Z_S = 50 Ω
Input return loss[3)]	RL_{in}	8	11	–	dB	–
Output return loss[3)]	RL_{out}	12	18	–	dB	–
Reverse isolation[3)]	$1/\|S_{12}\|^2$	32	37	–	dB	–
Power gain settling time[4),5)]	t_S	–	5	8	µs	OFF- to ON-mode
		–	5	8	µs	ON- to OFF-mode
Inband input 1dB-compression point[3)]	IP_{1dB}	-15	-12	–	dBm	–
Inband input 3rd-order intercept point[6),3)]	IIP_3	-11	-8	–	dBm	f_1 = 1575 MHz f_2 = f_1 +/-1 MHz
Out-of-band input 3rd-order intercept point[7),5)]	IIP_{3oob}	-7	-4	–	dBm	f_1 = 1712.7 MHz f_2 = 1850 MHz
Stability[5)]	k	> 2	> 3	–		f = 20 MHz ... 10 GHz

1) Based on the application described in chapter 3
2) PCB losses are subtracted
3) Verification based on AQL; not 100% tested in production
4) To be within 1 dB of the final gain OFF- to ON-mode; to be within 3 dB of the final gain ON- to OFF-mode
5) Guaranteed by device design; not tested in production
6) Input power = -30 dBm for each tone
7) Input power = -20 dBm for each tone

3 Application Information

Application Board Configuration

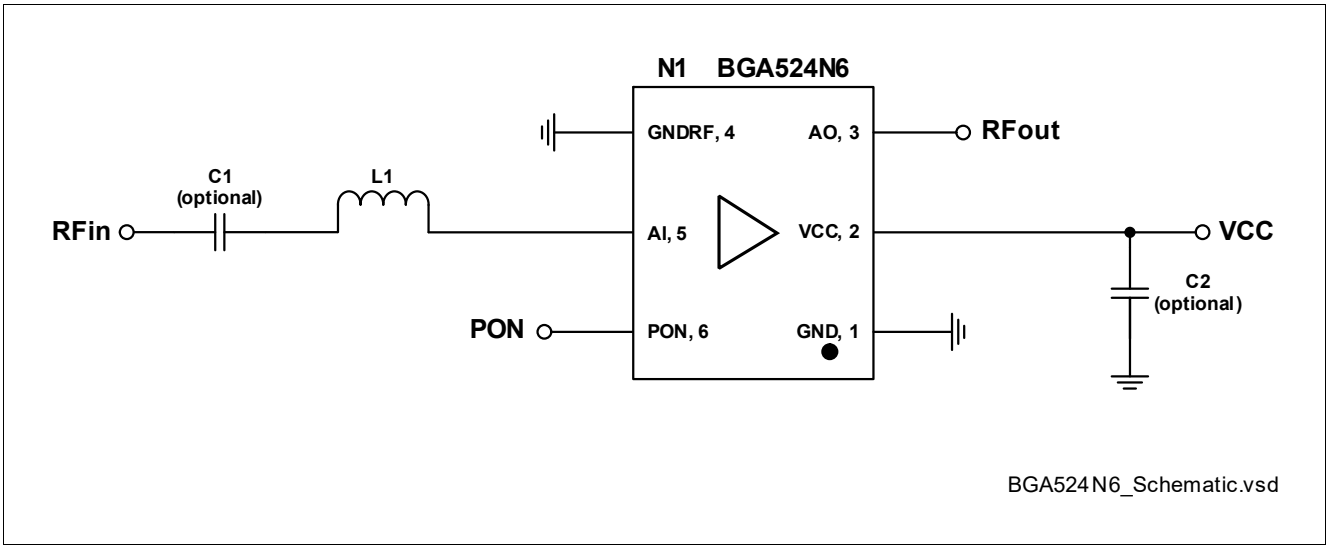

Figure 2 Application Schematic BGA524N6

Table 6 Bill of Materials

Name	Value	Package	Manufacturer	Function
C1 (optional)	1nF	0402	Various	DC block [1)]
C2 (optional)	> 10nF[2)]	0402	Various	RF bypass [3)]
L1	8.2nH	0402	Murata LQW type	Input matching
N1	BGA524N6	TSNP-6-2 / TSNP-6-10	Infineon	SiGe LNA

1) DC block might be realized with pre-filter in GNSS applications
2) For data sheet characteristics 1µF used
3) RF bypass recommended to mitigate power supply noise

A list of all application notes is available at **http://www.infineon.com/gpslna.appnotes**.

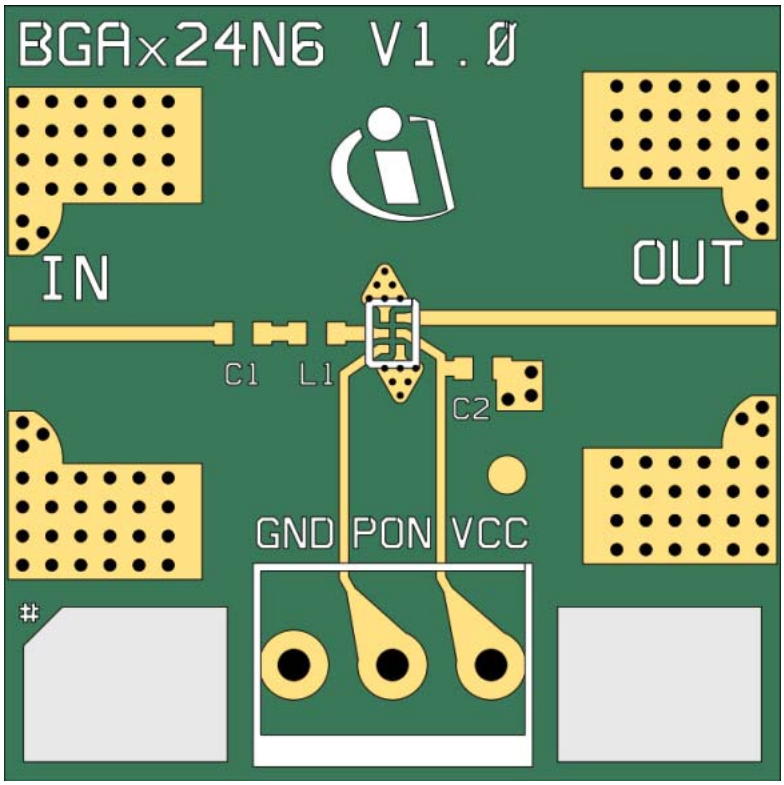

BGAx24N6_Application_Board.vsd

Figure 3 Drawing of Application Board

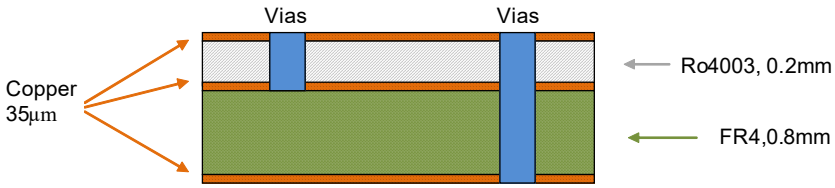

BGAx24N6_application_board_sideview.vsd

Figure 4 Application Board Cross-Section

4 Package Information

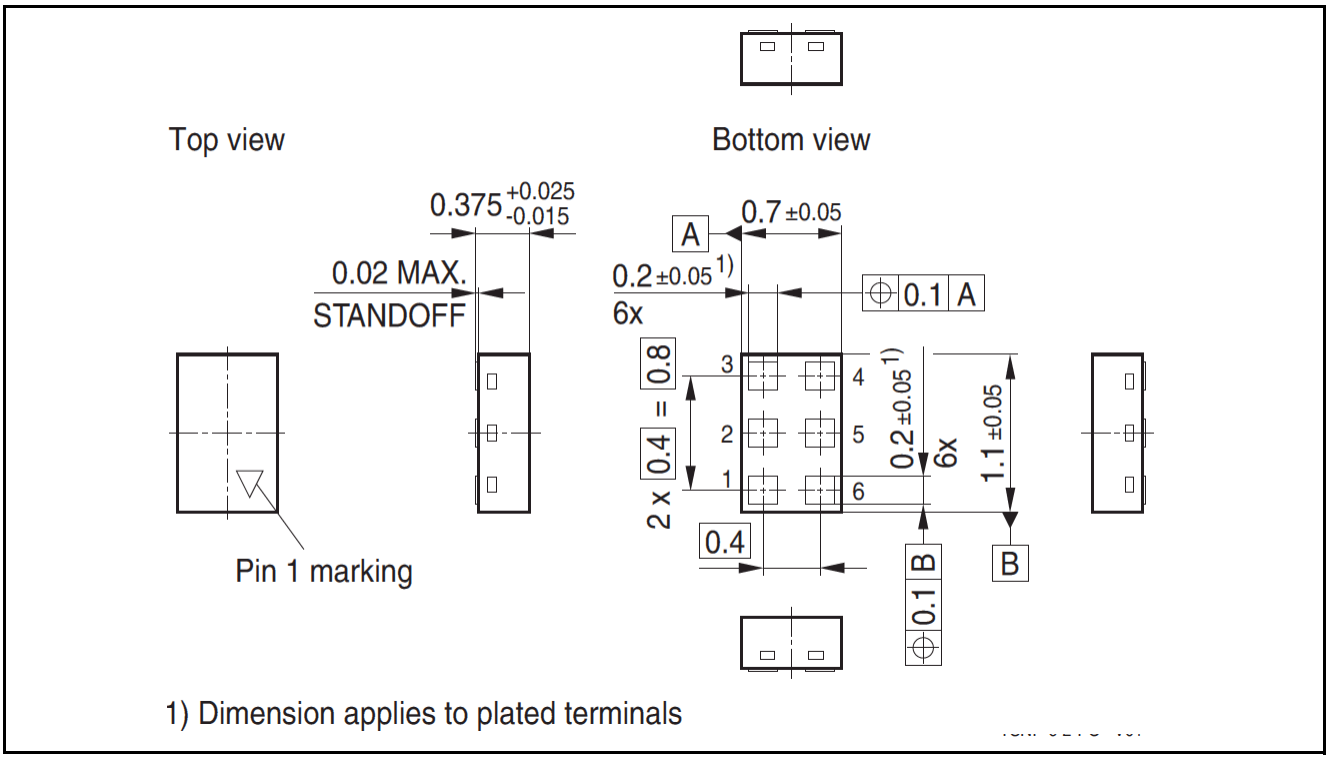

Figure 5 **TSNP-6-2 Package Outline** (top, side and bottom views)

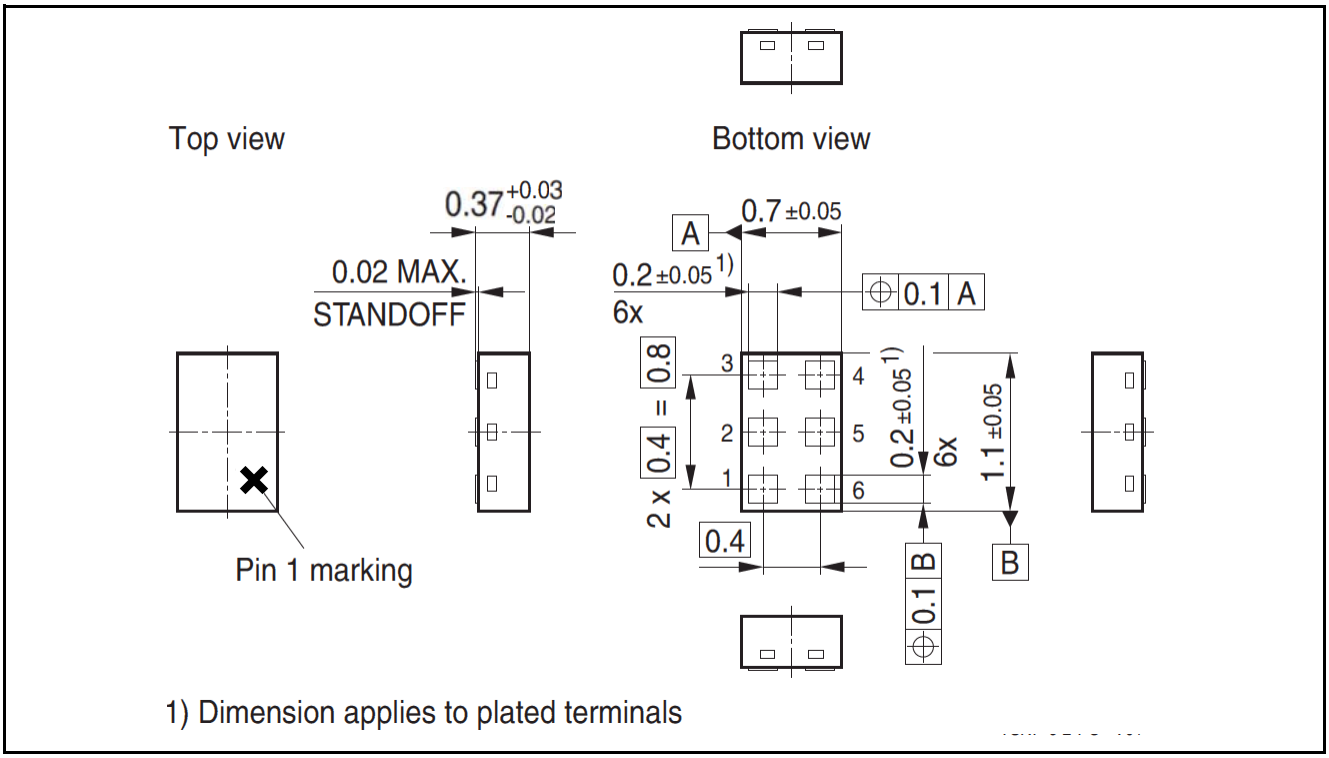

Figure 6 **TSNP-6-10 Package Outline** (top, side and bottom views)

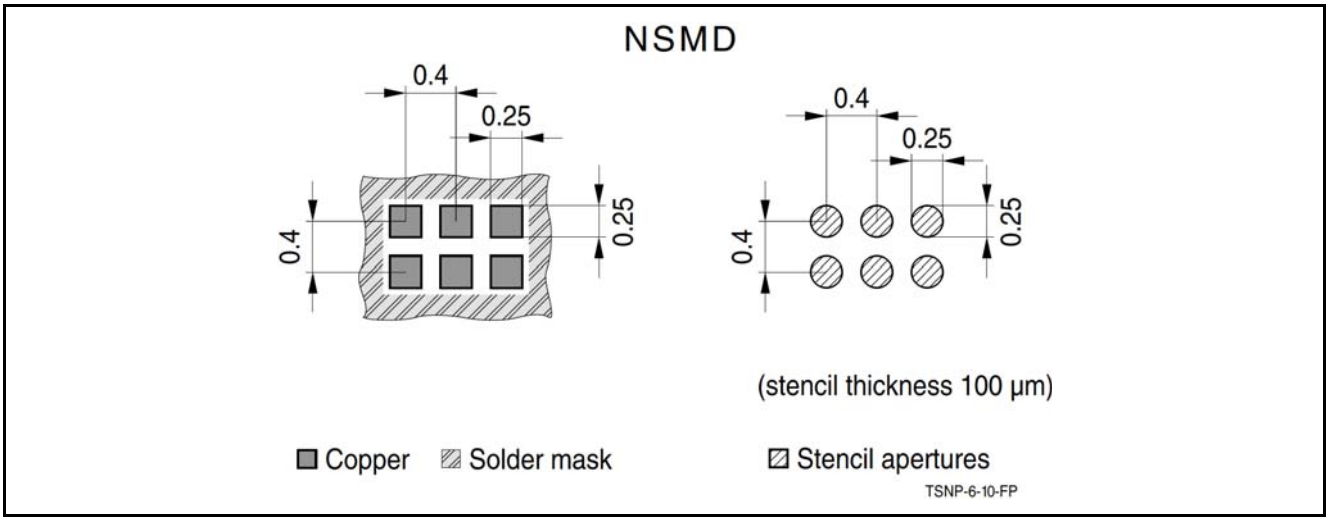

Figure 7 Footprint Recommendation TSNP-6-2 and TSNP-6-10

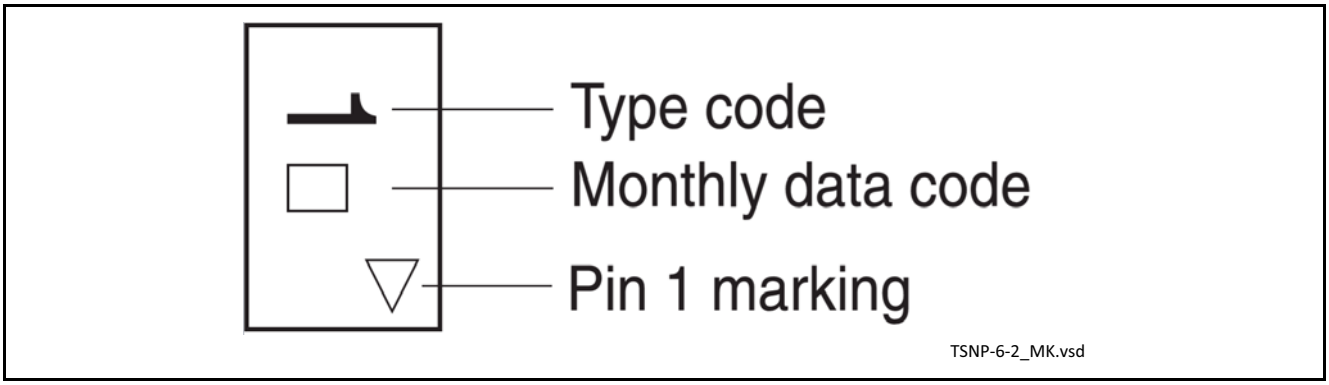

Figure 8 Marking Layout TSNP-6-2 (top view, product type code see Page 7)

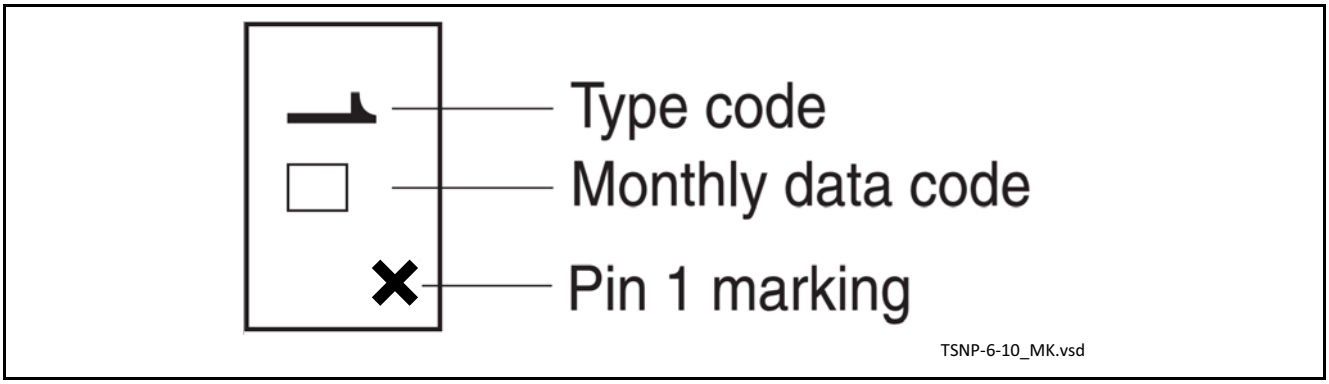

Figure 9 Marking Layout TSNP-6-10 (top view, product type code see Page 7)

Month	2015	2016	2017	2018	2019	2020	2021	2022	2023	2024	2025	2026
01	a	p	A	P	a	p	A	P	a	p	A	P
02	b	q	B	Q	b	q	B	Q	b	q	B	Q
03	c	r	C	R	c	r	C	R	c	r	C	R
04	d	s	D	S	d	s	D	S	d	s	D	S
05	e	t	E	T	e	t	E	T	e	t	E	T
06	f	u	F	U	f	u	F	U	f	u	F	U
07	g	v	G	V	g	v	G	V	g	v	G	V
08	h	x	H	X	h	x	H	X	h	x	H	X
09	j	y	J	Y	j	y	J	Y	j	y	J	Y
10	k	z	K	Z	k	z	K	Z	k	z	K	Z
11	l	2	L	4	l	2	L	4	l	2	L	4
12	n	3	N	5	n	3	N	5	n	3	N	5

Figure 10 Date Code Marking TSNP-6-2 and TSNP-6-10

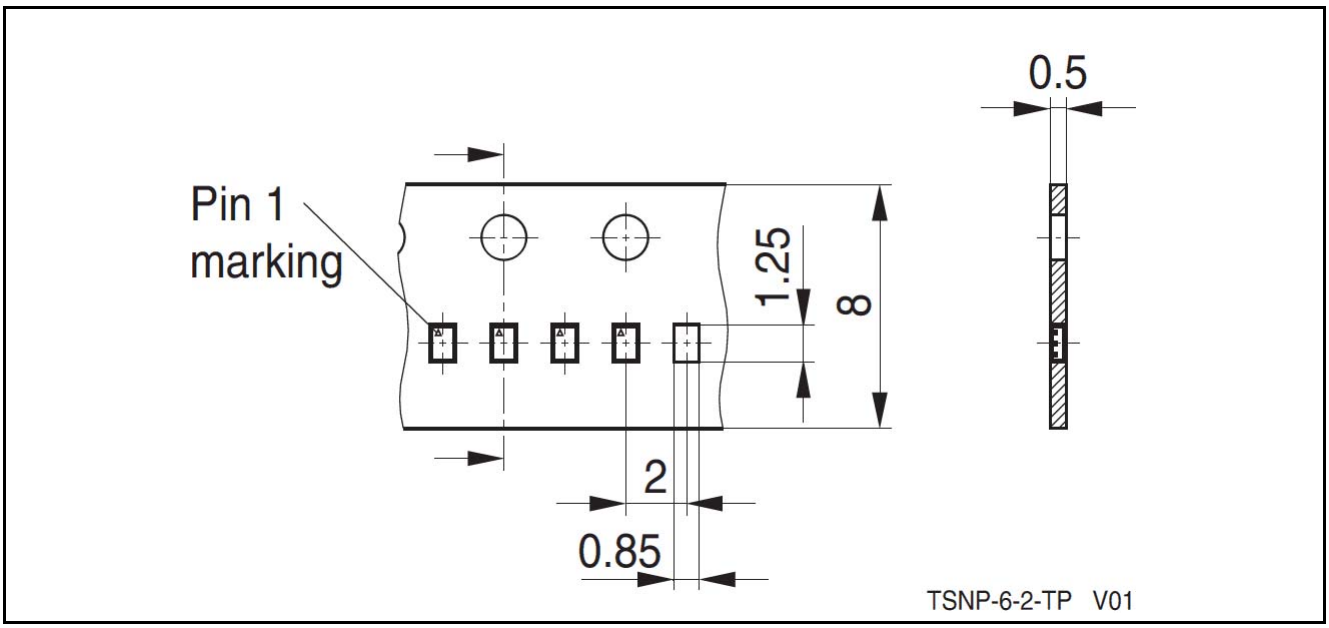

Figure 11 Tape & Reel Dimensions TSNP-6-2 (reel diameter 180 mm, pieces/reel 15000)

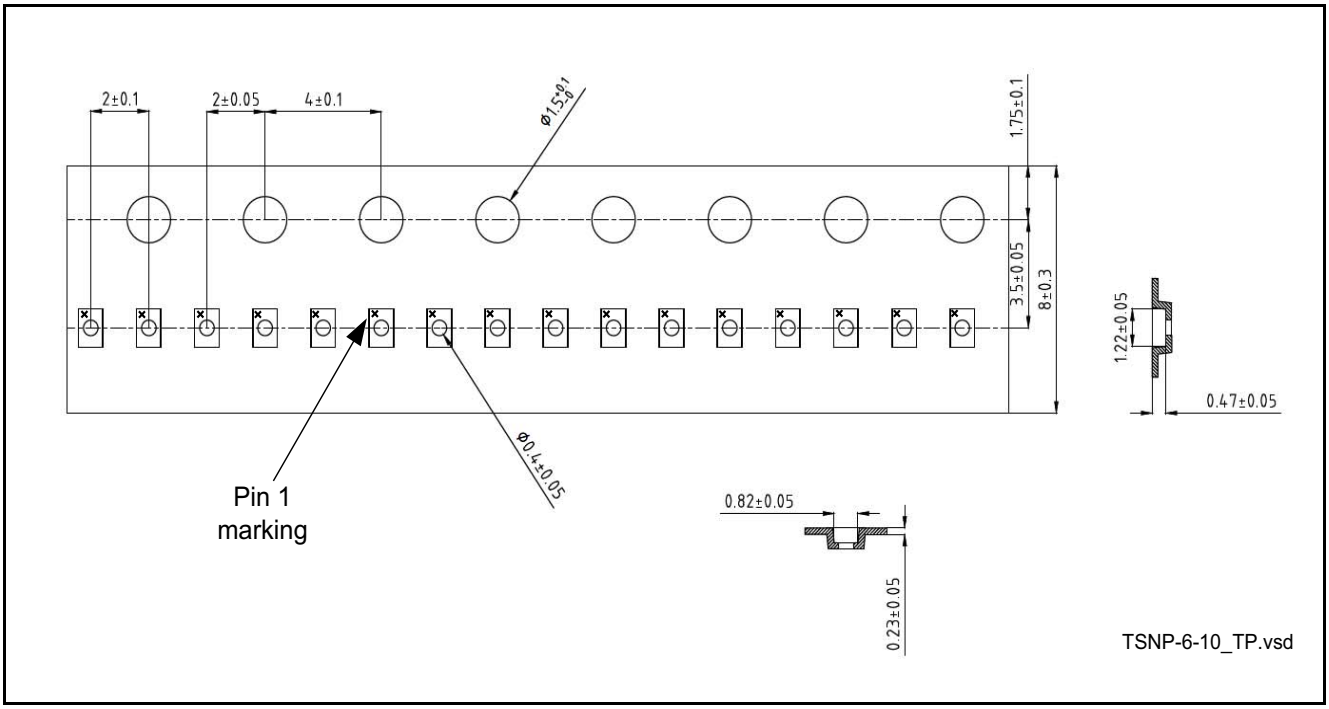

Figure 12 Tape & Reel Dimensions TSNP-6-10 (reel diameter 180 mm, pieces/reel 12000)

w w w . i n f i n e o n . c o m

Published by Infineon Technologies AG

Mouser Electronics

Authorized Distributor

Click to View Pricing, Inventory, Delivery & Lifecycle Information:

Infineon:
BGA524N6E6327XTSA1