WE RECOMMEND THESE CONNECTORS FOR OPTIMAL SERVICE LEVEL

Preferred Part

- SHORT LEAD-TIMES
- LOW MOQs
- QUICK SAMPLING
- AVAILABLE AT DISTRIBUTION

Preferred Part	
77313-101-04LF	77313-118-04LF
77313-101-06LF	77313-118-06LF
77313-101-08LF	77313-118-08LF
77313-101-10LF	77313-118-10LF
77313-101-12LF	77313-118-12LF
77313-101-14LF	77313-118-14LF
77313-101-16LF	77313-118-16LF
77313-101-18LF	77313-118-18LF
77313-101-20LF	77313-118-20LF

PLATING
1 = 0.76µm GOLD/GXT ON CONTACT AREA
2µm TIN MIN ON TAIL
1.27µm Ni MIN UNDERLAYER

PIN STYLE
SEE SHEET 3

TOTAL NB OF POSITIONS

PACKAGING : – = POLYBAG

RoHS COMPATIBLE
SEE NOTE 7

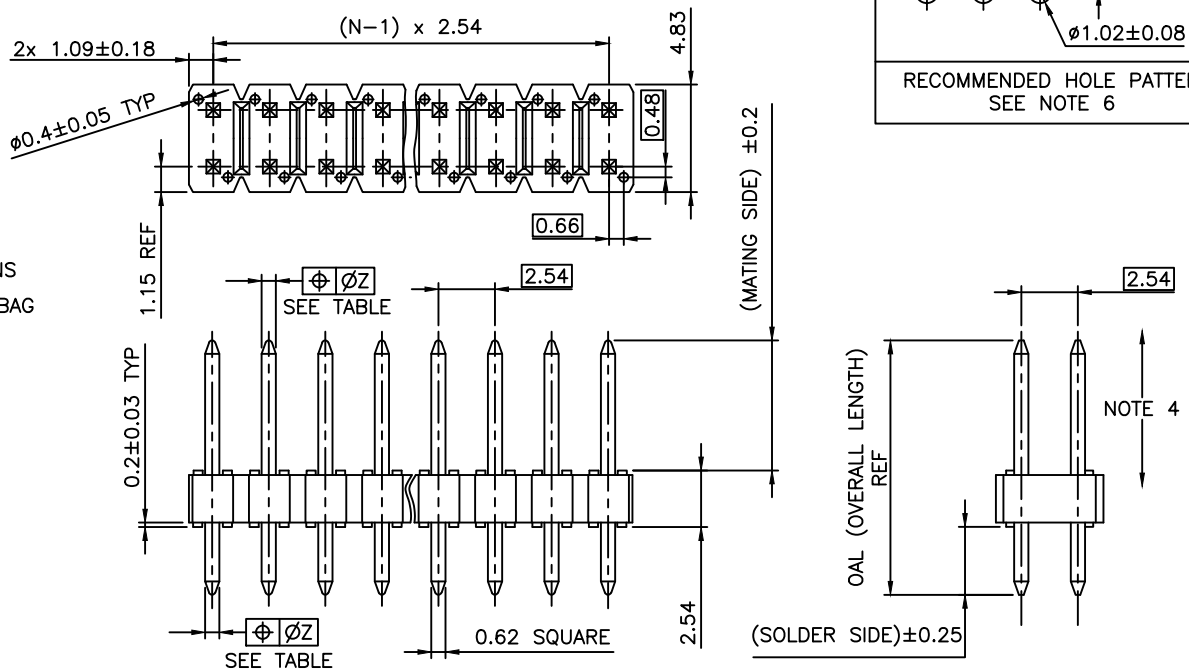

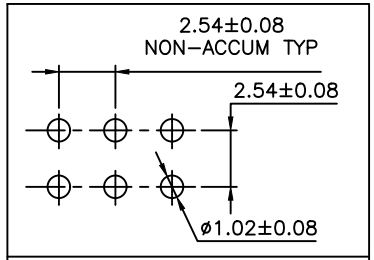

RECOMMENDED HOLE PATTERN
SEE NOTE 6

NOTES:

1. HOUSING MATERIAL : HIGH TEMPERATURE THERMOPLASTIC. UL94V-0 COLOR: BLACK
2. PIN MATERIAL : PHOSPHOR BRONZE
3. BERGSTIK PRODUCT PACKAGED IN BULK
   BERGSTRIP PRODUCT PACKAGED PER REELS, SEE SHEET 2
4. 9N MIN RETENTION IN EITHER DIRECTION
5. TO DETERMINE DIMENSIONS :
   N = NUMBER OF POSITIONS PER ROW
   EXAMPLE : 8 POS N x 2.54 = 20.32mm
6. FOR PIN IN PASTE SOLDERING APPLICATION :
   FINISHED PLATED HOLE Ø1.02–Ø1.06
   LAND Ø1.45 MAX
7. RoHS COMPATIBLE PRODUCT SPECIFICATIONS
   a – PLATING:
   – "LF" MEANS THE PRODUCT IS LEAD-FREE, 2µm MINIMUM MATTE TIN OVER 1.27µm MINIMUM NICKEL UNDERPLATE
   b – MANUFACTURING PROCESS COMPATIBILITY
   – THE HOUSING WILL WITHSTAND EXPOSURE TO 260°C ±5°C SOLDER BATH TEMPERATURE FOR 5 SECONDS IN A WAVE SOLDER APPLICATION WITH A 1.6mm MIN THICK CIRCUIT BOARD
   – REFLOW COMPATIBLE
   c – LABELING:
   – MEETS PACKAGING SPECS AS PER GS-14-920
   d – LEGAL STATEMENT: SEE GS-47-0004
8. THIS PART SERIES IS NOT INITIALLY INTENDED FOR AUTOMOTIVE APPLICATIONS. ADDITIONAL FEES ARE CHARGEABLE FOR ANY ADDITIONAL QUALIFICATION AND TEST REPORTS PERFORMED OUTSIDE THE SCOPE OF THE STANDARD PRODUCT SPECIFICATIONS.
9. UNLESS OTHERWISE APPROVED BY AMPHENOL, ALL PARTS AND COMPONENTS ARE DESIGNED & BUILT ACCORDING TO AMPHENOL'S SPECIFICATIONS WHICH ARE SUBJECT TO CHANGE WITHOUT NOTICE.

TOLERANCE "Z" DEPEND UPON PIN MATING AND SOLDER LENGTHS

MATING/SOLDER LENGTH	ØZ	MATING/SOLDER LENGTH	ØZ
UP TO 10mm	Ø0.4	UP TO 14mm	Ø0.45
UP TO 18mm	Ø0.5	UP TO 22mm	Ø0.55
UP TO 26mm	Ø0.6	OVER 26mm	Ø0.65

mat'l. code SEE NOTES				surface ISO 1302		tolerance ISO 406 ISO 1101		projection
ltr	ecn no	dr	date	tolerances unless otherwise specified				
CP	F-52796	DDE	24.09.04	angles	linear	.X ±0.3		mm
CR	F-54441	DDE	25.01.27			.XX ±0.15		
CS	F-55487	DDE	25.04.16			.XXX ±0.05		scale 5:1
CT	F-58161	DDE	25.11.14	dr	D.LEGRAND		01.01.24	
CU	F-58402	DDE	25.12.01	engr	J.COMPAGNON		01.01.24	
				chr	J.COMPAGNON		01.01.24	
CN	F-49596	DDE	23.10.27	appd	J.COMPAGNON		01.01.24	
sheet index	revision	CU	BR	K				
	sheet	1	2	3				

product family: BERGSTIK

title: UNSHR.HEADER STR DR TMT

dwg no: 77313 sheet 1 of 3 size A3

type: CUSTOMER Drawing

form: A3

Amphenol FCI FCIconnect.com
Copyright FCI
Downloaded from Arrow.com.

EXTENDED RANGE

PRODUCT NUMBER
77313–YXX–XXLF

- PLATING, SEE BELOW (AS AVAILABLE)
- PIN STYLE, SEE SHEET 3 (AS AVAILABLE)
- OPTION LETTERS, SEE ON RIGHT (MAY BE SUBJECT TO TOOLING FEES)
- TOTAL NB OF POSITIONS : 04 TO 72
- RoHS COMPATIBLE SEE NOTE 7

PLATING :

1 = 0.76µm GOLD/GXT ON CONTACT AREA, 2µm TIN MIN ON TAIL
4 = 2µm TIN MIN FULL PLATED
8 = 0.38µm GOLD/GXT ON CONTACT AREA, 2µm TIN MIN ON TAIL
9 = GOLD FLASH ON CONTACT AREA, 2µm TIN MIN ON TAIL
G = 0.76µm FULL GXT
S = 0.38µm FULL GXT
T = 2µm TIN MIN FULL PLATED INCLUDED PIN TYP
– 1.27µm NICKEL MIN UNDERLAYER FOR ALL PLATING VERSIONS

RETENTION OPTION

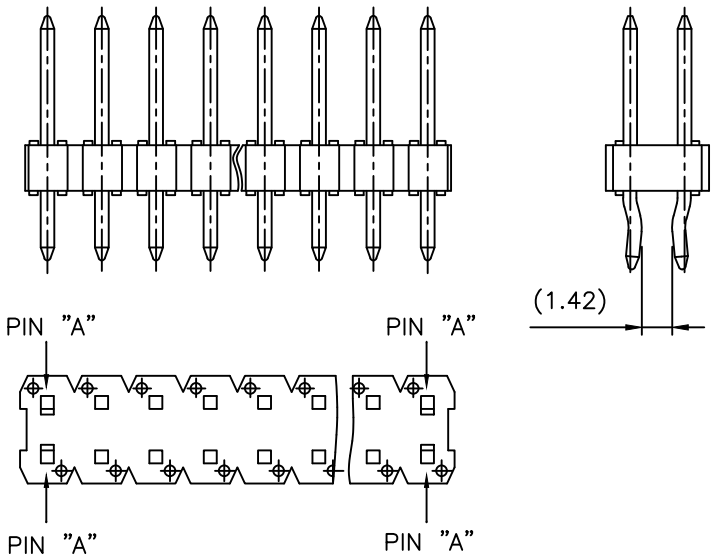

NOTES :

1. PART NUMBER 77313–YXXRXXLF
2. 4 PINS "A" USED FOR RETENTION
   DIRECTION OF RETENTION SHOWN BY ARROWS
   PIN "A" AT EACH END OF HEADER.
3. FOR RETENTION OPTION , SOLDER TAIL LENGTH TO BE 2.9 MIN UP TO 3.5 MAX.

OPTIONS :

– = BULK PACKAGING
"A" = TAPE & REEL WITH CAP, AS AVAILABLE
"T" = STANDARD TUBE PACKAGING – ONLY AVAILABLE UPON REQUEST
"V" = BLIBOX PACK FOR CUSTOMER DEDICATED PART
"AV" = TAPE & REEL WITH CAP FOR CUSTOMER DEDICATED PART
"KV" = TAPE & REEL WITHOUT CAP FOR CUSTOMER DEDICATED PART
"TV" = TUBE WITHOUT CAP FOR CUSTOMER DEDICATED PART
"R" = RETENTION FEATURE SHEET 4
IF RETENTION FEATURE "R" AND TUBE PACKAGING "T" ARE BOTH REQUIRED
OPTIONAL LETTER "R" WILL APPEAR INSTEAD OF THE FIRST DASH
EXAMPLE : 77313R118T40LF
"KR" = T&R WITHOUT CAP WITH RETENTION FEATURE
"ERP" = POLYBAG PACKAGING FOR DEDICATED CUSTOMER, WITH SPECIFIC LABEL

PRODUCT NUMBER (BERGSTRIP PACKAGING)
77313–YXX–00LF

- PLATING
- INDICATES THE PRODUCT IS RoHS COMPATIBLE, SEE NOTE 7
- POSITIONS PER REEL : 00=45,000 (BERGSTRIP)

1= 0.76µm GOLD/GXT ON CONTACT AREA, 2µm TIN MIN ON TAILS
8= 0.38µm GOLD/GXT ON CONTACT AREA, 2µm TIN MIN ON TAILS
4= 2.0µm TIN MIN FULL PLATED
1.27µm NICKEL MIN UNDERLAYER FOR ALL PLATING VERSIONS

PIN STYLE	MATING	SOLDER	OAL
01	5.84	2.41	10.8
02	5.84	3.42	11.8
18	5.84	3.05	11.43
22	7.75	3.05	13.35
24	6.75	2.9	12.2
27	6.6	2.66	11.8

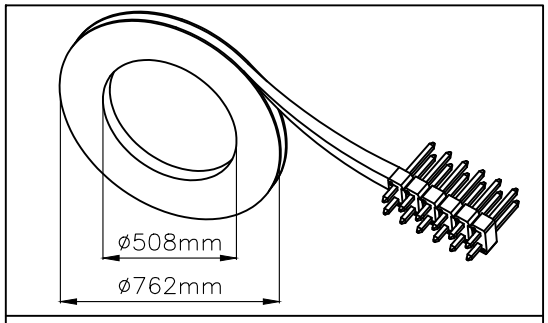

BERGSTRIP HEADER REEL PACKAGING DIMENSIONS

ltr	ecn no	dr	date
BM	F–47089	DDE	23.01.23
BN	F–54441	DDE	25.01.27
BP	F–58161	DDE	25.11.14
BR	F–58402	DDE	25.12.01
BK	F–22605	BVE	15.11.24
BL	F–45578	DDE	22.08.05

mat'l. code | surface ISO 1302 | tolerance ISO 406 ISO 1101 | projection | product family: BERGSTIK
tolerances unless otherwise specified: angles, linear
mm | scale N/A
title: UNSHR.HEADER STR DR TMT

dr	D.LEGRAND	01.01.24
engr	J.COMPAGNON	01.01.24
chr	J.COMPAGNON	01.01.24
appd	JF.NOTTEAU	01.01.24

dwg no 77313 | sheet 2 of – | size A3
type CUSTOMER | Drawing
sheet index | revision sheet

form: A3

Amphenol FCI
FCIconnect.com
Copyright FCI
Downloaded from Arrow.com.

EXTENDED RANGE

PRODUCTS SPECIFICATIONS			
PIN STYLE	MATING	SOLDER	OAL
01	5.84	2.41	10.8
02	5.84	3.42	11.8
03	5.72	5.09	13.35
04	5.72	7.64	15.90
05	5.72	10.14	18.40
15	8.51	2.55	13.6
18	5.84	3.05	11.43
19	12.83	3.03	18.4
20	15.37	3.04	20.95
22	7.75	3.05	13.35
24	6.75	2.9	12.2
27	6.6	2.65	11.8
29	17.46	3.50	23.5
38	5.84	3.82	12.20
46	8.08	2.98	13.6
52	9.5	3.05	15.09
57	8.46	3.05	14.05
58	14.47	3.05	20.06
83	20.46	3.0	26.0
85	10.5	2.9	15.9
87	6.98	3.05	12.57
89	6.93	5.00	14.47
90	6.75	4.05	13.34
91	5.60	10.21	18.4
92	5.65	12.76	20.95
93	6.00	4.81	13.35
94	9.65	2.90	15.09
95	8.90	3.60	15.09
96	20.83	3.05	26.42
97	14.70	3.70	20.95
98	6.00	6.00	14.47
99	8.05	2.25	12.8
AA	11.90	3.30	17.70
AB	7.00	1.50	11.00
AC	N/A		
AD	8.51	10.59	21.64

PRODUCTS SPECIFICATIONS			
PIN STYLE	MATING	SOLDER	OAL
AE	3.30	3.30	9.14
AF	N/A		
AG	4.79	3.00	10.33
AH	2.67	3.43	8.64
AJ	8.00	8.00	18.54
AK	7.00	7.00	16.54
AL	5.90	1.60	10.05
AM	12.06	2.60	17.20
AN	11.50	1.90	15.94
AP	14.00	2.20	18.70
AR	8.96	2.10	13.60
AS	8.08	2.72	13.37
AT	5.84	7.20	15.57
AU	10.95	3.05	16.55
AV	8.08	4.32	14.96
AW	8.08	3.81	14.43
AX	6.40	3.09	12.05
AY	5.08	2.79	10.40
BA	8.97	2.79	14.05
BB	6.48	3.05	12.05
BC	11.85	4.04	18.40
BD	26.00	3.05	31.55
BE	9.08	1.90	13.52
BF	9.90	2.65	15.09
BG	9.50	3.25	15.29
BH	5.72	16.14	24.40
BJ	4.00	2.69	9.23
BK	10.50	3.20	16.24
BL	18.29	3.05	23.88
BM	10.00	2.54	14.84
BN	13.21	3.00	18.75
BP	28.00	4.00	34.50
BR	16.60	2.90	22.04
BS	6.75	6.75	16.00
BT	15.76	3.50	21.80
BU	20.76	3.50	26.80

PRODUCTS SPECIFICATIONS			
PIN STYLE	MATING	SOLDER	OAL
BV	11.85	2.36	16.75

mat'l. code				surface ISO 1302		tolerance ISO 406 ISO 1101	projection
ltr	ecn no	dr	date	tolerances unless otherwise specified			
H	F-48329	DDE	23.05.23	angles	linear		mm
J	F-49596	DDE	23.10.27				
K	F-54441	DDE	25.01.27				scale N/A
				dr	D.LEGRAND	01.01.24	
E	F-40035	DDE	21.02.17	engr	J.COMPAGNON	01.01.24	
F	F-45578	DDE	22.08.05	chr	J.COMPAGNON	01.01.24	
G	F-47089	DDE	23.01.23	appd	JF.NOTTEAU	01.01.24	
sheet index	revision						
	sheet						

product family: BERGSTIK

title: UNSHR.HEADER STR DR TMT

dwg no: 77313 sheet 3 of – size A3

type: CUSTOMER Drawing

Amphenol FCi

form: A3

PDS: Rev :CU STATUS:Released Printed: Dec 02, 2025

Amphenol FCi FCIconnect.com
Copyright FCI
Downloaded from Arrow.com.