TRACO POWER

AC/DC Power Supply

TXO 150 Series, 150 Watt

- **Industrial AC/DC power supplies for cost sensitive applications in 4" x 2" package**
- **Universal input range 90 to 264 VAC**
- **Operating temperature range: -20°C to +70°C**
- **Protection class II prepared**
- **Internal EN 55032 class B filter**
- **Short circuit, overvoltage and overload protection**
- **IEC/EN/UL 62368-1 safety approvals**
- **Compliance to EN 61000-3-2**
- **3-year product warranty**

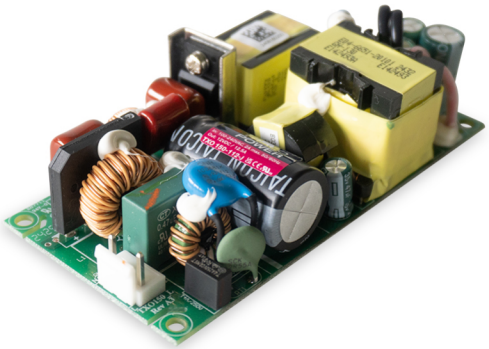

UL 62368-1 IEC 62368-1

The TXO 150 is a compact 150 Watt AC/DC open frame module with reinforced I/O isolation designed for a wide range of cost sensitive applications. A high efficiency of 90% allows the TXO 150 to deliver 120 Watt up to +50°C with convection cooling and 150 Watt up to +50°C with forced air cooling, while going up to +70°C with derating. It comes with an active power factor correction and EMC characteristics dedicated for applications in industrial/automation and test & measurement fields making these power supplies an ideal solution for various industrial and cost sensitive applications.

Models

Order Code	Output Power max.	Output Voltage nom.	Output Current max. (Forced air cooling)	Output Current max. (Natural convection)	Efficiency typ.
TXO 150-112-J	150 W	12 VDC	12'500 mA	10'000 mA	90 %
TXO 150-115-J		15 VDC	10'000 mA	8'000 mA	90 %
TXO 150-124-J		24 VDC	6'250 mA	5'000 mA	90 %
TXO 150-148-J		48 VDC	3'125 mA	3'340 mA	90 %

Options

TCI 130-DC	- Optional Cable: www.tracopower.com/overview/tci130-dc
TCI-AC1	- Optional Cable: www.tracopower.com/overview/tci-ac1
on demand (backorder with MOQ non stocking item)	- Optional model with 36 VDC and 4'180 mA - Optional model with 56 VDC and 2'680 mA

Note - Total output power must not exceed 120 W for convection cooling applications

Input Specifications

Input Voltage		Operational Range:	90 - 264 VAC (Full Range)
		Rated Range:	100 - 240 VAC (Full Range)
Input Frequency		Operational Range:	47 - 63 Hz
		Certified:	50/60 Hz
Power Consumption	- No load & Vin = 230 VAC		150 mW max.
	- No load & Vin = 115 VAC		150 mW max.
Input Current	- Full load & Vin = 230 VAC		780 mA max.
	- Full load & Vin = 115 VAC		1'500 mA max.
Input Inrush Current	- At 230 VAC		80 A max.
	- At 115 VAC		60 A max.
Power Factor	- At 230 VAC		0.9 min. (Active Power Factor Correction)
	- At 115 VAC		0.95 min. (Active Power Factor Correction)
Input Protection			4.0 A / 250 VAC (Internal Fuse in L)
Recommended Input Fuse			4'000 mA (slow blow) (The need of an external fuse has to be assessed in the final application.)

Output Specifications

Voltage Set Accuracy			±2% max.
Regulation	- Input Variation (Vmin - Vmax)		0.5% max.
	- Load Variation (10 - 100%)		3% max.
Ripple and Noise (20 MHz Bandwidth)		12 VDC model:	180 mVp-p max. (w/ 10 nF MLCC || 22 µF Al)
		15 VDC model:	200 mVp-p max. (w/ 10 nF MLCC || 22 µF Al)
		24 VDC model:	300 mVp-p max. (w/ 10 nF MLCC || 22 µF Al)
		36 VDC model:	540 mVp-p max. (w/ 10 nF MLCC || 22 µF Al)
		48 VDC model:	720 mVp-p max. (w/ 10 nF MLCC || 22 µF Al)
		56 VDC model:	840 mVp-p max. (w/ 10 nF MLCC || 22 µF Al)
Capacitive Load		12 VDC model:	10'000 µF max.
		15 VDC model:	8'000 µF max.
		24 VDC model:	5'000 µF max.
		36 VDC model:	3'000 µF max.
		48 VDC model:	2'500 µF max.
		56 VDC model:	2'000 µF max.
Minimum Load			Not required
Temperature Coefficient			±3 %/K max.
Hold-up Time	- At 230 VAC		10 ms min.
	- At 115 VAC		10 ms min.
Start-up Time	- At 230 VAC		2'000 ms max.
	- At 115 VAC		2'000 ms max.
Short Circuit Protection			Continuous, Automatic recovery
Output Current Limitation			110 - 200% of Iout max.
Overvoltage Protection			110 - 160% of Vout nom.
Transient Response	- Response Deviation		3% typ. / 5% max. (50% to 75% Load Step)
	- Response Time		2'500 µs typ. / 4'000 µs max. (50% to 75% Load Step)

Safety Specifications

Standards	- IT / Multimedia Equipment		EN 62368-1 IEC 62368-1 UL 62368-1
	- Certification Documents		www.tracopower.com/overview/txo150
Protection Class			Class I & II (Prepared): Reinforced Insulation
		See application note:	www.tracopower.com/overview/txo150

All specifications valid at 230 VAC, resistive full load and +25°C after warm-up time, unless otherwise stated.

Pollution Degree		PD 2
Over Voltage Category		OVC II

EMC Specifications

EMI (Emissions)	- Conducted Emissions		EN 55032 class B (internal filter) FCC 47 Part 15 class B (internal filter)
	- Radiated Emissions		EN 55032 class A (internal filter) FCC 47 Part 15 class A (internal filter)
	- Harmonic Current Emissions		EN 61000-3-2, class A
	- Voltage Fluctuations & Flicker		EN 61000-3-3
EMS (Immunity)			EN 55035 (Multimedia)
	- Electrostatic Discharge	Air:	EN 61000-4-2, ±8 kV, perf. criteria A
		Contact:	EN 61000-4-2, ±4 kV, perf. criteria A
	- RF Electromagnetic Field		EN 61000-4-3, 3 V/m, perf. criteria A
	- EFT (Burst) / Surge		EN 61000-4-4, ±1 kV, perf. criteria A
		L to L:	EN 61000-4-5, ±1 kV, perf. criteria A
		L to PE:	EN 61000-4-5, ±2 kV, perf. criteria A
	- Conducted RF Disturbances		EN 61000-4-6, 3 Vrms, perf. criteria A
	- PF Magnetic Field	Continuous:	EN 61000-4-8, 1 A/m, perf. criteria A
	- Voltage Dips & Interruptions	230 VAC / 50 Hz:	EN 61000-4-11 30%, 30 periods, perf. criteria A >95%, 0.5 periods, perf. criteria A >95%, 300 periods, perf. criteria B
		115 VAC / 60 Hz:	EN 61000-4-11 30%, 30 periods, perf. criteria B >95%, 0.5 periods, perf. criteria A >95%, 300 periods, perf. criteria B
EMC / Environmental	- Certification Documents		www.tracopower.com/overview/txo150

General Specifications

Relative Humidity			95% max. (non condensing)
Temperature Ranges	- Operating Temperature		−20°C to +70°C
	- Approved Ambient Temp.		+70°C max. (for 50% load) +50°C max. (for 100% load) (for compliance to 62368-1)
	- Storage Temperature		−40°C to +85°C
Power Derating	- High Temperature		2.5 %/K above 50°C
		See application note:	www.tracopower.com/overview/txo150
Cooling System	- Option 1		Forced air cooling (with external fan, 24 CFM)
	- Option 2		Natural convection (20 LFM)
Altitude During Operation			2'000 m max.
Regulator Topology			LLC Converter
Switching Frequency			22 - 110 kHz (PFM) 100 kHz typ. (PFM)
Insulation System			Reinforced Insulation
Working Voltage (rated)			472 VAC
Isolation Test Voltage	- Input to Output, 60 s		3'000 VAC (4'242 VDC)
	- Input to Case or PE, 60 s		2'500 VDC
	- Output to Case or PE, 60 s		500 VDC
Creepage	- Input to Output		5 mm min.
	- Input to Case or PE		5 mm min.
	- Output to Case or PE		2.5 mm min.
Clearance	- Input to Output		5 mm min.
	- Input to Case or PE		5 mm min.
	- Output to Case or PE		2.5 mm min.
Isolation Resistance	- Input to Output, 500 VDC		100 MΩ min.

All specifications valid at 230 VAC, resistive full load and +25°C after warm-up time, unless otherwise stated.

Isolation Capacitance	- Input to Output, 100 kHz, 1 V	2'670 pF typ. / 3'204 pF max.
Leakage Current (264 VAC / 60 Hz)	- Earth Leakage Current	300 µA max.
	- Touch Current	300 µA max.
Distance Through Isolation		0.4 mm
Reliability	- Calculated MTBF	100'000 h (MIL-HDBK-217F, ground benign)
Washing Process		Not allowed
Environment	- Vibration	2.4 g, 3 axis, random waveform, 50-500 Hz, 10 min/axis
	- Mechanical Shock	20 g, 3 axis, half sine, 10 ms, total 6 shocks
Housing Type		Open Frame
Mounting Type		Chassis Mount
Connection Type		Pin Connector
Weight		200 g
Environmental Compliance	- REACH Declaration	www.tracopower.com/info/reach-declaration.pdf REACH SVHC list compliant REACH Annex XVII compliant
	- RoHS Declaration	Exemptions: 7(a) (RoHS exemptions refer to the component concentration only, not to the overall concentration in the product (O5A rule).)
	- SCIP Reference Number	fc9d447a-d745-49b2-abc6-27747a57f18e

Additional Information

Supporting Documents	www.tracopower.com/overview/txo150
Frequently Asked Questions	www.tracopower.com/glossary-faq
Glossary	www.tracopower.com/info/glossary.pdf

Outline Dimensions

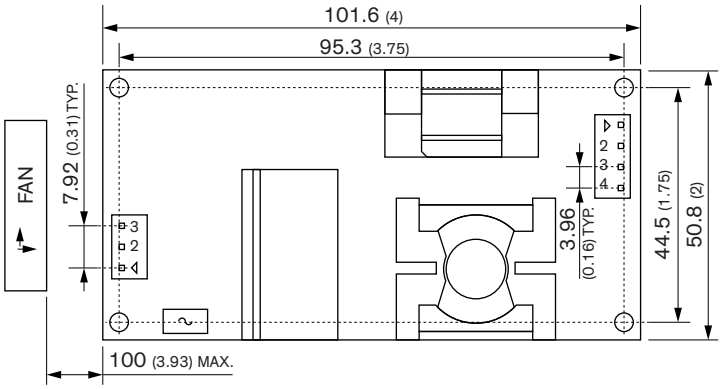

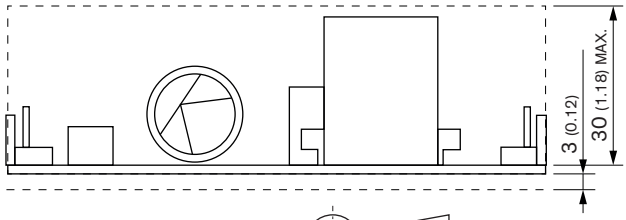

Dimensions in mm (inch)
Tolerances: ±0.5 (±0.02)

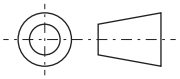

Pin connectors

Input (CN1)		Output (CN2)	
Pin	**Function**	**Pin**	**Function**
1	AC (L)	**1-2**	+Vout
3	AC (N)	**3-4**	–Vout

Input: JST series, B3P-VH(LF)(SN), 3.96mm
mates with JST crimp terminal: SVH-21T-P1.1 or equivalent
and terminal housing: VHR-3N or equivalent

Output: JST series, JST VH Type AW3961 WV-4P, 3.96mm

© Copyright 2025 Traco Electronic AG