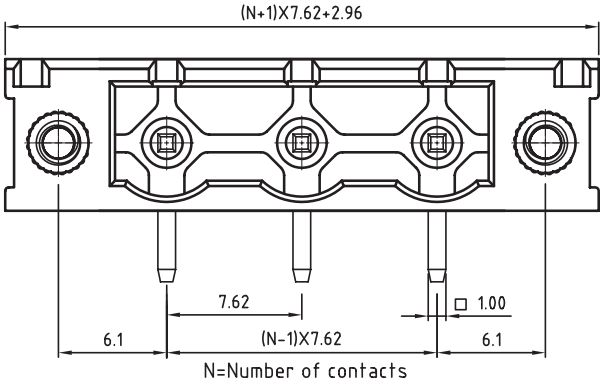


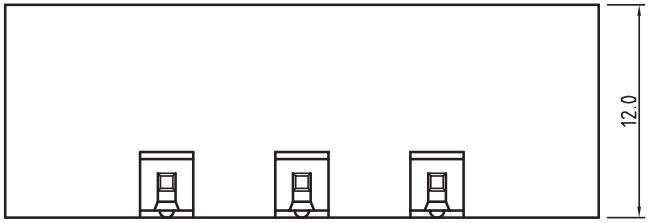


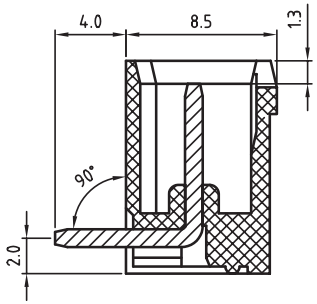


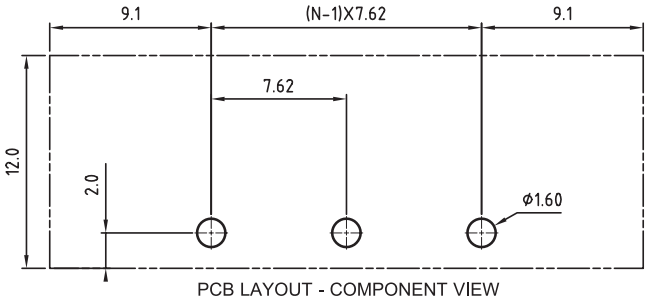


PCB LAYOUT - COMPONENT VIEW

TECHNICAL CHARACTERISTICS

MATERIAL
INSULATOR: PA66
FLAMABILITY RATING: UL94-V0
COLOR: GREEN
CONTACT: BRASS
SOLDER TAIL PLATING: TIN
FLANGES SCREW NUT: BRASS M2.5

ENVIRONMENTAL
OPERATING TEMPERATURE: -40 UP TO 105°C
COMPLIANCE: LEAD FREE AND ROHS

| | |
|---|---|
| ELECTRICAL | cULus |
| CURRENT RATING: | 20A |
| WORKING VOLTAGE: | 300VAC |
| WITHSTANDING VOLTAGE: | 1.6KV |
| CONTACT RESISTANCE: | 20 mOhm max |

STANDARD
cULus CERTIFIED E315414

MECHANICAL
PITCH: 7.62MM

SOLDERING: WAVE PROCESS ONLY

PACKAGING: BOX

RoHS Compliant

| REV | DATE | FILE | BY |
|---|---|---|---|
| G | | | |
| F | | | |
| E | | | |
| D | | | |
| C | 25-FEV-22 | PBT -> PA66 | AK |
| B | 16-OCT-09 | STANDARD | JP |
| A | 05-NOV-08 | PDF | JP |

PROJECTION:

GENERAL TOLERANCE
.X = +/- 0.2
.XX = +/- 0.15

APPROVAL: JHe

UNIT: MM
SCALE:
SHEET: 1/1
DRAW: MARVIN

WÜRTH ELEKTRONIK

**DESCRIPTION: SERIE 3174 - 7.62MM CLOSE HORIZONTAL PCB HEADER WITH FLANGES WR-TBL**

**WERI PART NO: 691 317 410 0xx**

SIZE **A4**

# Mouser Electronics

Authorized Distributor

Click to View Pricing, Inventory, Delivery & Lifecycle Information:

Wurth Elektronik:
691317410002