THIS DRAWING IS UNPUBLISHED. RELEASED FOR PUBLICATION -,- .
© COPYRIGHT - By - ALL RIGHTS RESERVED.

LOC	DIST
G	86

REVISIONS

P	LTR	DESCRIPTION	DATE	DWN	APVD
	A2	REVISED PER ECO-11-004917	11MAR11	RK	HMR

AMP
WIRE RANGE

22-16 AWG
SOLID OR STRANDED

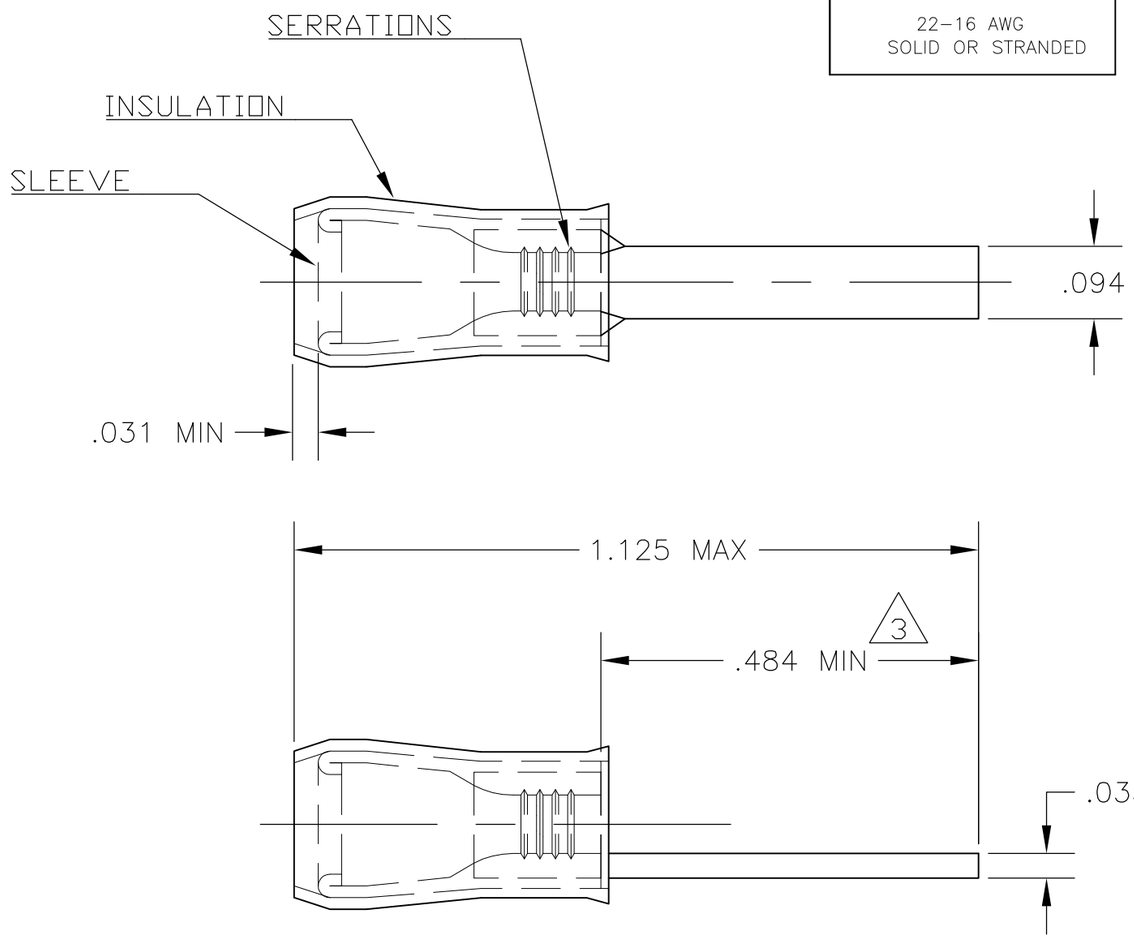

1. BODY - COPPER PER ASTM B-152
   SLEEVE - COPPER PER ASTM B-152
   INSULATION - NYLON
2. BODY - TIN PLATE PER ASTM B-545
   SLEEVE - TIN PLATE PER ASTM B-545
   INSULATION - COLOR , RED
3. DIMENSION APPLIES FROM EDGE OF METAL WIRE BBL TO FLANGE
4. WIRE INSULATION DIA .080 TO .125

150730
PART NO

CUSTOMER SERVICE SYSTEMS

FOR ADDITIONAL PRODUCT INFORMATION OR COPIES OF DRAWINGS AND TECHNICAL DOCUMENTS	PRODUCT INFORMATION CENTER 1-800-522-6752
FOR APPLICATION TOOLING INFORMATION	TOOLING ASSISTANCE CENTER 1-800-722-1111
FOR ORDER ENTRY	1-800-526-5142

THIS DRAWING IS A CONTROLLED DOCUMENT FOR AMP INCORPORATED. IT IS SUBJECT TO CHANGE AND THE CONTROLLING ENGINEERING ORGANIZATION SHOULD BE CONTACTED FOR THE LATEST REVISION.

MAX RECOMMENDED OPERATING TEMPERATURE: 105°C

VOLTAGE RATING: 300V MAX

CIRCULAR MIL AREA: 0.26-1.65mm²[509-3,260] SOLID OR STRANDED

THIS DRAWING IS A CONTROLLED DOCUMENT.

DIMENSIONS: INCHES

TOLERANCES UNLESS OTHERWISE SPECIFIED:

0 PLC	± -
1 PLC	± -
2 PLC	± .008
3 PLC	± -
4 PLC	± -
ANGLES	± 5°

MATERIAL 1

FINISH 2

DWN	jr ruth	24FEB10
CHK	TOM MICHIELUTTI	24FEB10
APVD	TOM MICHIELUTTI	24FEB10
PRODUCT SPEC	—	
APPLICATION SPEC	—	
WEIGHT	—	

TE Connectivity

NAME: TERMINAL, TAB, PIDG, WIRE SIZE 22-16 —

SIZE	CAGE CODE	DRAWING NO	RESTRICTED TO
A3	00779	C-150730	—

CUSTOMER DRAWING

SCALE	SHEET	REV
5:1	1 OF 1	A2

1470-19 (3/11)

Mouser Electronics

Authorized Distributor

Click to View Pricing, Inventory, Delivery & Lifecycle Information:

TE Connectivity:
150730